http://www.managemyhome.com

WASHING MACHINE SERVICE MANUAL

▲ **CAUTION**

READ THIS MANUAL CAREFULLY TO DIAGNOSE PROBLEMS CORRECTLY BEFORE SERVICING THE UNIT.

MODEL : 796.4051#90#

Kenmore ELITE®

P/No.: MFL30599151

CONTENTS

1. SPECIFICATIONS 3
2. FEATURES & TECHNICAL EXPLANATION 4
3. PARTS IDENTIFICATION 7
4. INSTALLATION AND TEST 8
5. OPERATION 11
   5-1. CONTROL PANEL FEATURES 11
   5-2. CYCLE GUIDE 13
   5-3. CYCLE OPTIONS 15
   5-4. EXPLANATION OF EACH PROCESS 15
6. PROGRAM CHART 17
7. TEST MODE 19
   7-1. SAFETY CAUTION 19
   7-2. LOAD TEST MODE 19
   7-3. HOW TO CHECK THE WATER LEVEL FREQUENCY 19
8. TROUBLESHOOTING 20
   8-1. SAFETY CAUTION 20
   8-2. ERROR MODE SUMMARY 20
   8-3. TROUBLESHOOTING SUMMARY 22
   8-4. TROUBLESHOOTING WITH ERROR 24
   8-5. TROUBLESHOOTING ELSE 31
9. COMPONENT TESTING INFORMATION 36
   9-1. FILTER ASSEMBLY (LINE FILTER) 36
   9-2. DOOR LOOK SWITCH ASSEMBLY 37
   9-3. STATOR ASSEMBLY 39
   9-4. PUMP MOTOR ASSEMBLY 42
   9-5. INLET VALVE ASSEMBLY 43
   9-6. HEATER ASSEMBLY 44
   9-7. THERMISTOR ASSEMBLY 45
10. DISASSEMBLY INSTRUCTIONS 48
11. EXPLODED VIEW 56
   11-1. CABINET AND CONTROL PANEL ASSEMBLY 56
   11-2. DRUM AND TUB ASSEMBLY 57
   11-3. DISPENSER ASSEMBLY 58

1. SPECIFICATIONS

ITEM		4051#9##
COLOR		White, Patina Beige
POWER SUPPLY		AC 120 V, 60 Hz
PRODUCT WEIGHT		200.4 lb.(90.9kg)
ELECTRIC POWER CONSUMPTION	WASHING	280 W
	DRAIN MOTOR	50 W
	WASH HEATER	1000W
REVOLUTION SPEED	WASH	46 rpm
	SPIN	0-1200 rpm
CYCLE		10
WASH/RINSE TEMPERATURES		5
SPIN SPEEDS		5
OPTIONS		Stain Treat, 2nd Rinse, Delay Start, Clean Washer, Control Lock, My Cycle, Auto Soak, Smart Sense
OPERATIONAL WATER PRESSURE		14.5-116 psi (100-800 kPa)
CONTROL TYPE		Electronic
WASH CAPACITY [cu.ft]		3.87 (4.5 IEC)
DIMENSIONS		$26^{1/4}$” (W) X $30^{1/3}$” (D) X $38^{15/16}$” (H) ,$54^{3/8}$” (D, door open)
DELAY START		up to 19 hours
DOOR SWITCH TYPE		PTC + Solenoid
WATER LEVEL		10 steps (by sensor)
LAUNDRY LOAD SENSING		Incorporated
ERROR DIAGNOSIS		Incorporated
AUTO POWER OFF		Incorporated
CONTROL LOCK		Incorporated

2. FEATURES & TECHNICAL EXPLANATION

2-1. FEATURES

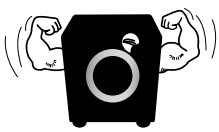

- **Ultra Capacity**

  The Larger drum enables not just higher head drop and stronger centrifugal force, but also less tangling and wrinkling of the laundry. Heavier loads, such as king size comforters, blankets, and curtains, can be washed.

- **Direct Drive System**

  The advanced Brushless DC motor directly drives the drum without belt and pulley.

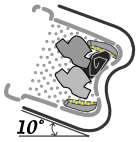

- **Tilted Drum and Extra Large Door Opening**

  Tilted drum and extra large opening make it possible to load and unload clothing more easily.

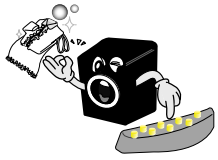

- **RollerJets**

  Washing ball enhances the wash performance and reduces damage to the clothing. The jets spray and help tumble clothes to enhance washing performance while maintaining fabric care.

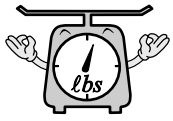

- **Automatic Wash Load Detection**

  Automatically detects the load and optimizes the washing time.

- **Built-in Heater**

  Internal heater helps to maintain water temperature at its optimum level for selected cycles.

- **Control Lock**

  The Control lock prevents children from pressing any button to change the settings during operation.

2-2. NEURO FUZZY WASHING TIME OPTIMIZATION

To get the best washing performance, optimal time is determined by the water temperature, the selected washing temperature, and the size of the load.

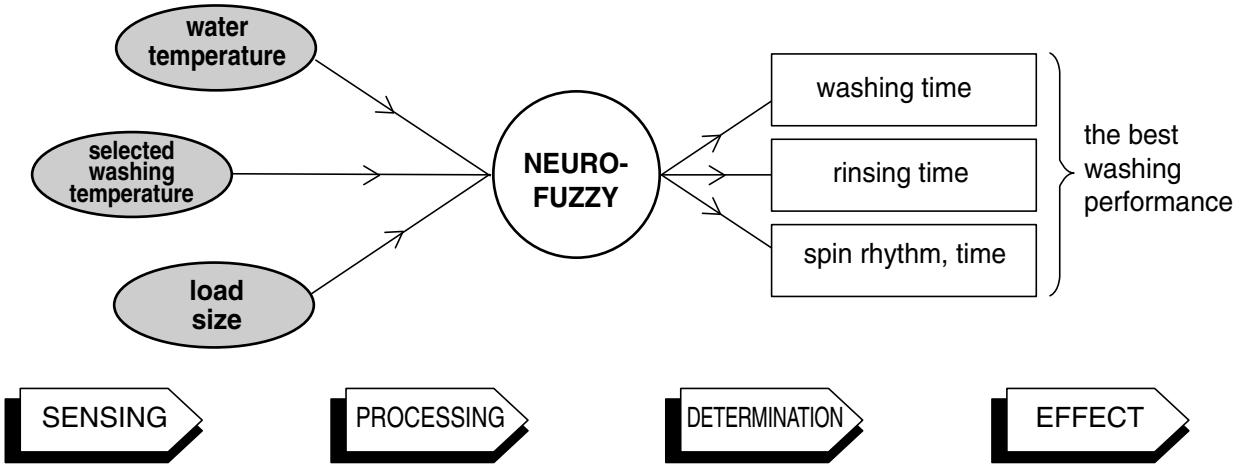

2-3. WATER LEVEL CONTROL

This model incorporates a pressure sensor which can sense the water level in the tub. The water supply is stopped when the water level reaches the preset level, the washing program then proceeds.

Spinning does not proceed until the water in the tub drains to a certain level.

2-4. DOOR CONTROL

The door can be opened by pulling the door handle whenever washer is not in operation.

When the cycle is completed, the DOOR LOCKED light will turn off.

If a power failure has occurred while in operation, the door will unlock after 5 minutes.

Clicking sounds can be heard when the door is locked/unlocked.

2-5. THE DOOR CAN NOT BE OPENED

- While program is operating.
- When a power failed and power plug is taken out in operation
- While Door Lock lights turn on.
- White the motor is in the process of intertial rotating, through the operation is paused.

2-6. CONTROL LOCK

- Use this option to prevent unwanted use of the washer. Press and hold CONTROL LOCK button for 5 seconds to lock/unlock control.
- When CONTROL LOCK is set, CONTROL LOCK lights and all buttons are disabled.
  You can lock the controls of the washer while washing.

3. PARTS IDENTIFICATION

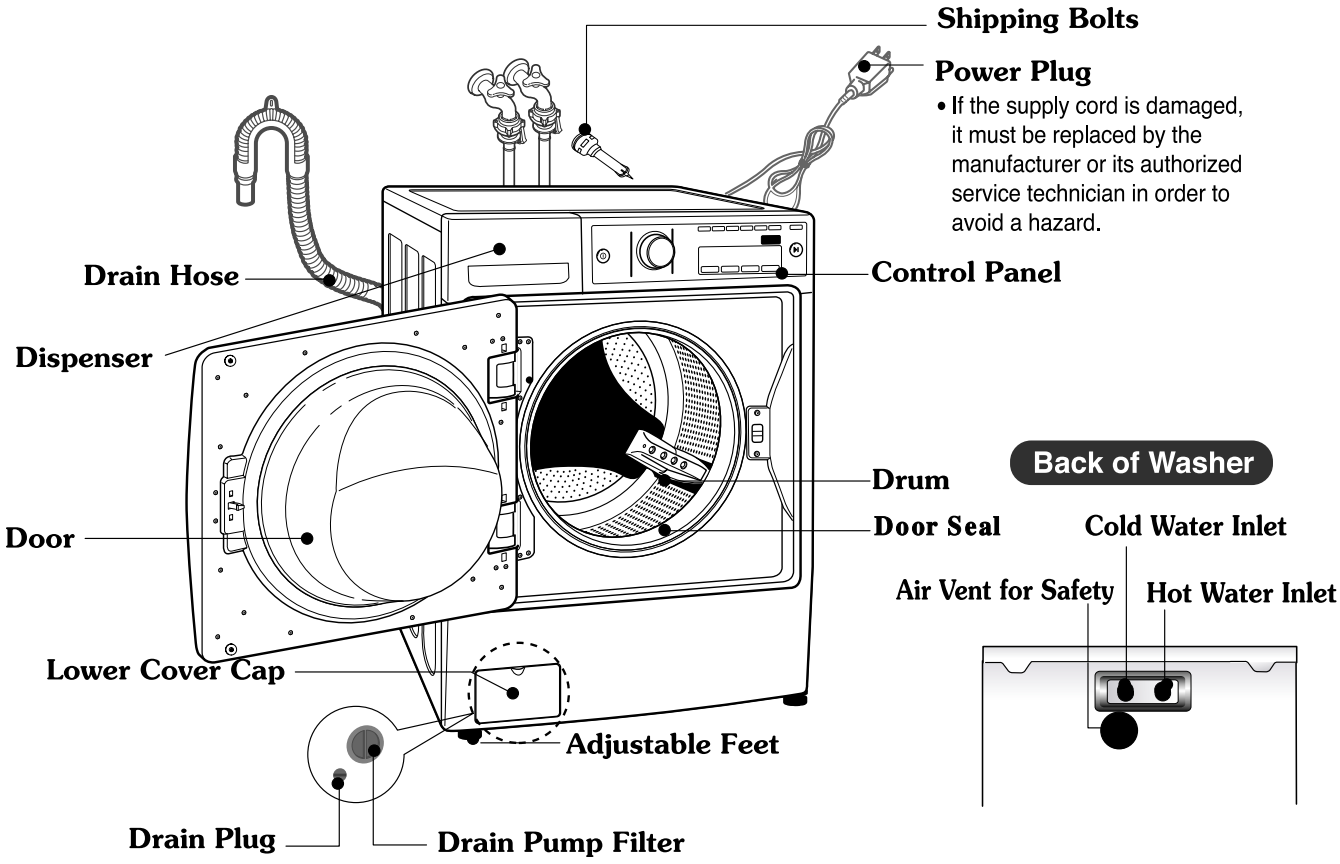

■ ACCESSORIES

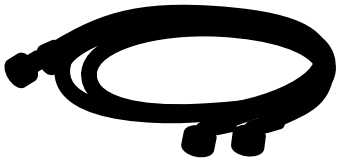

Hot/Cold (1 each) Hose

Wrench

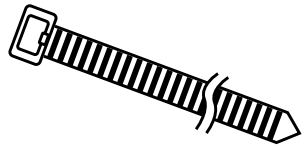

Tie strap (Option)
to secure drain hose to standpipe, inlet hose, or laundry tub

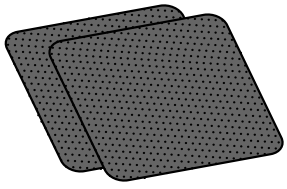

Non-skid pads

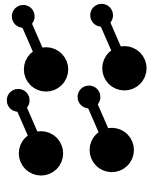

Caps(4)
(for covering shipping bolt holes)

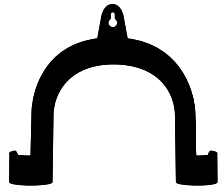

Elbow Bracket
(for securing drain hose)

4. INSTALLATION & TEST

1. Before servicing, ask the customer what the trouble is.
2. Check the setup (power supply is 120V, remove the transit bolts, level the washer...)
3. Check with the troubleshooting guide.
4. Plan your service method by referring to the disassembly instructions.
5. Service the unit.
6. After servicing, operate the appliance to see whether it functions correctly.

■ STANDARD INSTALLATION

The appliance should be installed as follows:

REMOVE THE SHIPPING BOLTS	INSTALL THE APPLIANCE ON A FLAT AND FIRM SURFACE	ADJUST THE LEVELING
• Remove the 4 shipping bolts with the supplied wrench. ※ Do first lower side to remove easily. • Keep the shipping bolts and spanner for future use. • Insert the 4 caps (provided) into the hole. 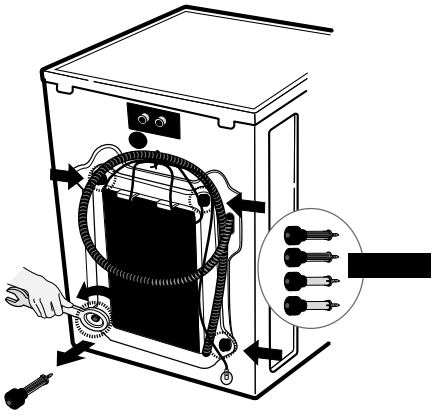	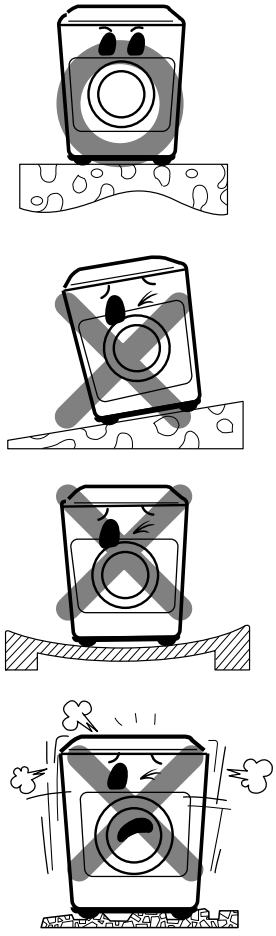	• Turn the leveling feet to adjust the appliance. 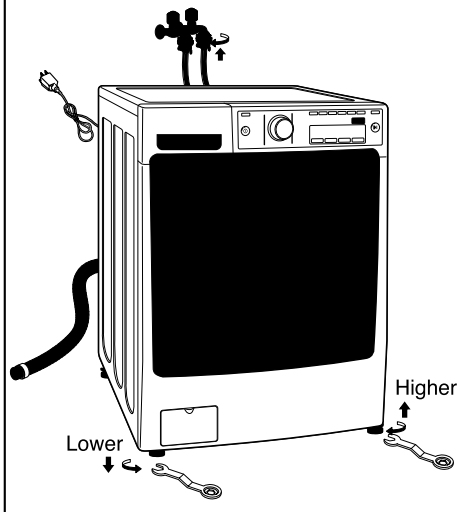 • Turn clockwise to raise; counterclockwise to lower.

■ HOW TO CONNECT THE INLET HOSE

- Verify that the rubber washer is inside of the valve connector.
- Tighten the inlet hose securely to prevent leaks.

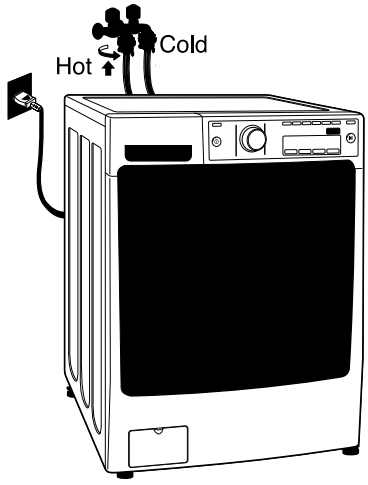

■ CONNECT THE DRAIN HOSE

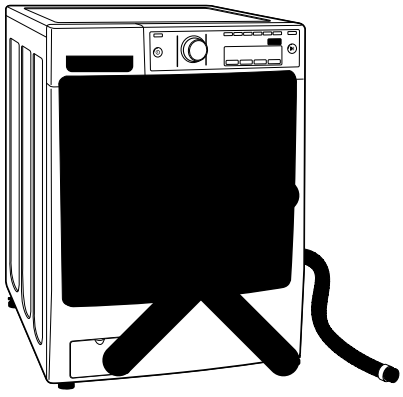

· Make sure that the hose is not twisted.

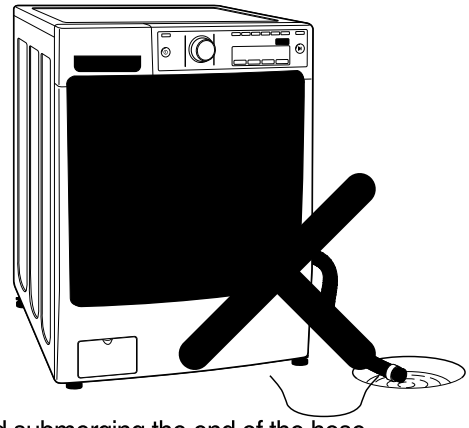

· Avoid submerging the end of the hose.

※ The end of the drain hose should be placed less than 96” from the floor.

■ CONNECT POWER PLUG

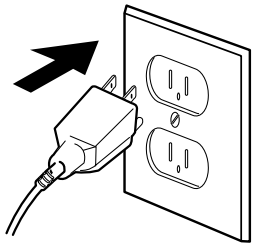

· Connect the power plug to the wall outlet.

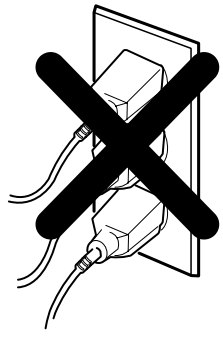

· Avoid connecting several electric devices, as doing so may cause a fire.

7 TEST OPERATION

1 Preparation for washing.

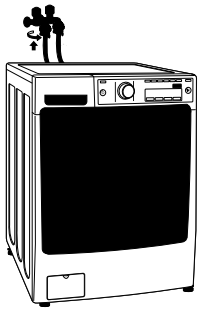

- Connect the power plug to the outlet.
- Connect the inlet hose.

2 Press the POWER button.

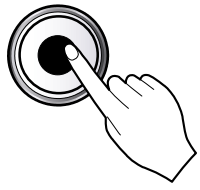

3 Press the START/PAUSE button.

- Listen for a click to determine if the door has locked.

4 Check the water supply.

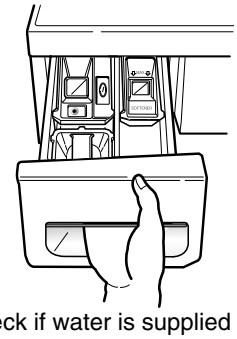

- Check if water is supplied through the detergent dispenser.

5 Check the automatic reverse rotation.

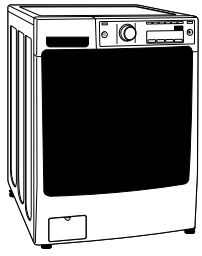

- Check if the drum rotates clockwise and counterclockwise.

6 Check the water heating function.

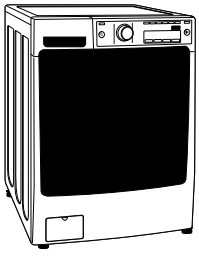

- Press the WASH/RINSE button and the present temperature will be displayed.

7 Check the drain and spin functions.

- Power off and the power on.
- Press the SPIN SPEED button.
- Press the START/PAUSE button.
- Check the spin and drain functions.

8 Press the START/PAUSE button.

- Listen for a click to determine if the door is unlocking.

9 Water removal.

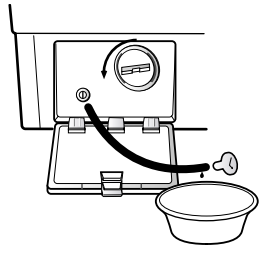

- If SERVICE is needed during check, remove the remaining water by pulling out the hose cap.

5. OPERATION

5-1. CONTROL PANEL FEATURES

■ **4051#9##**

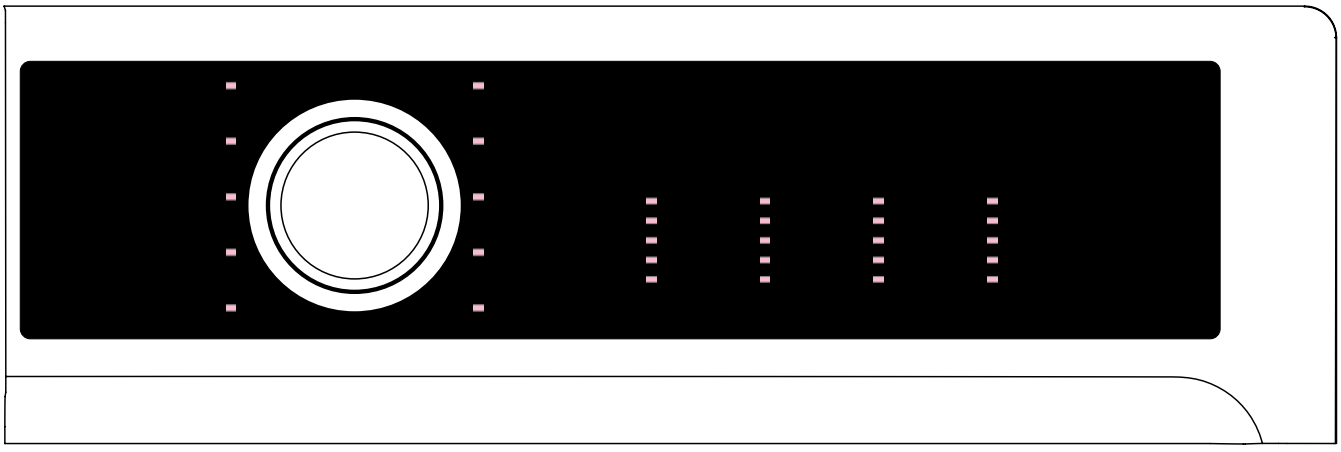

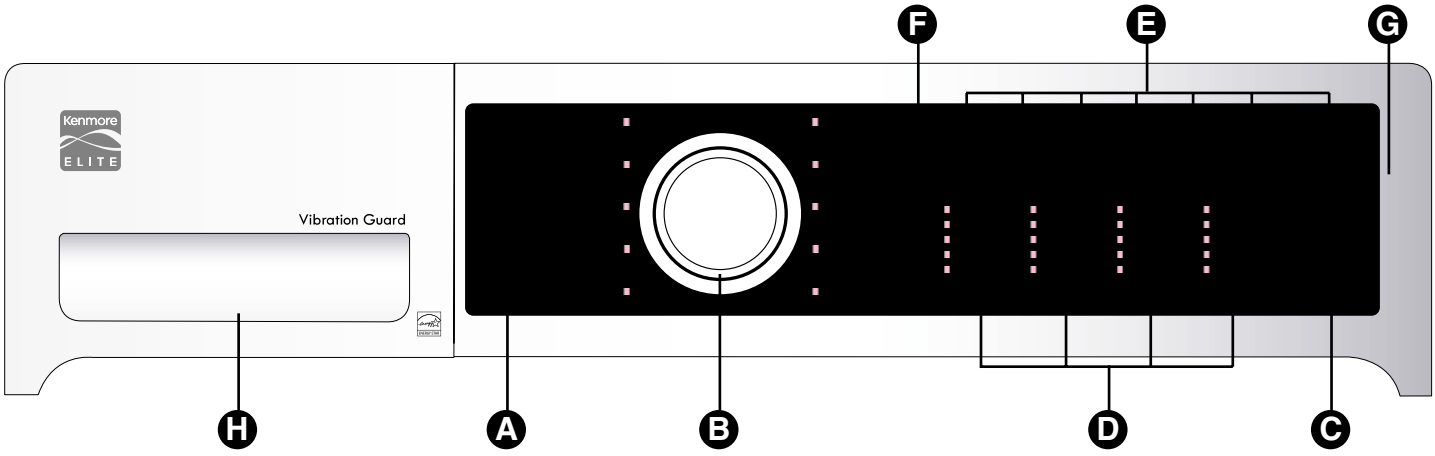

A POWER (ON/OFF) BUTTON

Press to turn the washer ON. Press again to turn the washer OFF.

NOTE: Pressing the POWER button during a cycle will cancel that cycle and any load settings will be lost. The door will unlock after a brief pause unless the water level or temperature is too high.

B CYCLE SELECTOR KNOB

Turn this knob to select the desired cycle. Once the desired cycle has been selected, the standard presets will be shown in the display. These settings can be adjusted using the cycle setting buttons anytime before starting the cycle.

C START/PAUSE BUTTON

Press this button to start the selected cycle.
If the washer is running, use this button to pause the cycle without losing the current settings.

NOTE : If you do not press the START/PAUSE button within 4 minutes of selecting a cycle, the washer automatically turns OFF.

D CYCLE MODIFIER BUTTONS

Use these buttons to adjust the desired cycle options for the selected cycle. The lights above the buttons show the current selection.

NOTE : Not all settings are available on all cycle selections.

E SPECIAL CYCLE AND OPTION BUTTONS

These buttons are used to activate special cycles or options.

F DETERGENT AMOUNT INDICATOR

Bars light up to indicate the best amount of HE detergent to use based on size of dry load sensed by washer control. Indicator will not be accurate if any wet clothes are placed in washer.

G TIME AND STATUS DISPLAY

The display shows the estimated time remaining, load size, cycle status, and door lock status.

H DISPENSER

Dispenser drawer. This drawer contains the compartments for detergent and additives.

5-2. CYCLE GUIDE

The cycle guide below shows the default settings, available options and recommended fabric types for each cycle. Allowable modifier adjustments are shown below the default setting for each cycle.

● = Available option

▒ = Default setting

■ 4051#9##

Cycle				Modifiers			Options		
Cycle	Fabric or Load Type	Display Time (Min.)	Wash Motion	Wash/Rinse Temperature	Spin Speed	Soil Level	ADD SOAK	2nd RINSE	STAIN TREAT
Normal/ Casual	Cotton, linen, towels, shirts, sheets, jeans, mixed loads	50-56	⬭	Warm/Cold Hot/Cold Cold/Cold	High Extra High No Spin Low Medium	Normal Heavy Light	●	●	●
Bulky/ Bedding	Large items such as blankets and comforters	59		Warm/Cold Warm/Warm Hot/Cold Cold/Cold	Low Medium No Spin	Normal Heavy Light	●	●	●
Kids Wear	Kids Wear	91-97	⬭	Hot/Cold Cold/Cold Warm/Cold Warm/Warm	High Extra High No Spin Low Medium	Heavy Light Normal	●	●	●
Heavy Duty	Heavy soiled Cotton Fabrics	94-100	⬭	Warm/Cold Warm/Warm Hot/Cold Cold/Cold	Extra High No Spin Low Medium High	Heavy Light Normal	●	●	●
Whitest Whites	White Fabrics	69-75	⬭	Hot/Cold Cold/Cold Warm/Cold Warm/Warm	High Extra High No Spin Low Medium	Normal Heavy Light	●	●	●
Express Wash	Lightly soiled clothing and small loads	20		Hot/Cold Cold/Cold Warm/Cold Warm/Warm	Extra High No Spin Low Medium High	Light Normal Heavy		●	
Cold Clean	Small loads of cotton, linen, towels, shirts, sheets, jeans, mixed loads	57-63		Cold/Cold	High Extra High No Spin Low Medium	Normal Light	●	●	
Sanitize	Heavily soiled items, such as work clothes, diapers, etc.	101-107	⬭	Extra Hot/Cold	High Extra High No Spin Low Medium	Normal Heavy Light	●	●	●
Delicates	Dress shirts/blouses nylons, sheer or lacy garments	42		Cold/Cold Warm/Cold Warm/Warm	Medium No Spin Low	Normal Heavy Light	●	●	
Rinse & Spin	Rinse and Spin	20			High Extra High No Spin Low Medium			●	

NOTE: To protect your garments, not every wash/rinse temperature, spin speed, soil level, or option is available with every cycle. A chime will sound and the LED will not light if the selection is not allowed.

NOTE: The washer automatically adjusts the wash time for the amount of laundry, water pressure, water heating time and other operating conditions.

⬭ **NOTE:** These cycles use various wash motions to enhance cleaning and/or fabric care performance. These wash motions may sound different at different stages of the wash cycle. This is normal.

5-3. CYCLE OPTIONS

DELAY START

Once you have selected the cycle and other settings, press this button to delay the start of the wash cycle. Each press of the button increases the delay time by one hour, for up to 19 hours. Once the desired delay time is set, press the START/PAUSE button to start the delay time. If the START/PAUSE button is not pressed within 4 minutes, the control will shut off and the settings will be lost.

STAIN TREAT

Use this option for heavily soiled loads that need improved stain treatment. When STAIN TREAT is selected, the water temperature for the selected cycle will begin as warm water to help prevent the setting of certain types of stains. Then as the cycle progresses, the water will be heated to higher temperatures to help remove stains that require treatment at higher temperatures. This option is designed for optimum stain removal.

NOTE: If STAIN TREAT is selected with the SANITIZE cycle, the cycle will begin with very hot water since that is default for that cycle and cannot be changed.

2nd RINSE

This option will add an extra rinse to the selected cycle. Use this option to help ensure the removal of detergent or bleach residue from fabrics.

AUTO SOAK

Use the AUTO SOAK option to presoak garments to help remove difficult spots or stains on fabrics. This option provides a 30 minute presoak prior to the start of the selected cycle.

1. Add detergent only to the Main wash compartment or Liquid Box of the dispenser drawer.
2. Select desired cycle.
3. Select cycle modifiers
4. Press the START/PAUSE.

5-4. SPECIAL FUNCTION

CLEAN WASHER

A buildup of detergent residue can occur in the wash tub over time and can lead to a mildewy or musty smell. The CLEAN WASHER cycle is specially designed to remove this buildup using bleach or other cleaner designed specifically for cleaning front load washers.

The CLEAN WASHER cycle should be run once a month, or more often under heavy use conditions or if odor is present.

NOTE: Do NOT use this cycle with clothes, and do NOT add detergent or fabric softener.

For powdered tub cleaners, add the cleaner to the main wash compartment of the dispenser drawer. Place tablet cleaners directly into the tub. Always follow the cleaner manufacturers instructions and Recommendations

CONTROL LOCK

Use this option to disable the controls. The washer can be locked during a cycle. This feature allows you to prevent children from changing cycles or operating the machine. Once set, the CONTROL LOCK must be turned off before the controls can be used. Once the washer has shut off, the power button will allow the machine to be turned on, but the controls will still be locked. When the controls are locked, "CL" will be displayed alternately with the estimated time remaining. Press and hold the CONTROL LOCK button for 5 seconds to activate or deactivate the controls.

MY CYCLE

Select this option to store a customized wash cycle for future use.

1. Select a cycle.
2. Press the desired options.
3. Press the desired modifiers.
4. To save the cycle press MY CYCLE for 3 seconds.
5. Press the START/PAUSE.
6. To reuse this cycle at another time, select MY CYCLE and press the START/PAUSE

SMART SENSE

This feature uses a sensor in the tub to check the hardness of the water and the detergent amount. Wash and rinse cycles will be adjusted to optimize wash and rinse performance.

To use the SMART SENSE feature press and hold 2nd RINSE button for 3 seconds.

- Excessive detergent amount: rinsing cycle increase.
- Insufficient detergent amount: washing time increase.
- A small amount of remaining detergent detected: additional rinsing will be added.

5-5. EXPLANATION OF EACH PROCESS

No.	Process	Explanation
1.	Stay	• Electrical power is supplied • Washer is ready to work and the micom is in the active mode.
2.	Water supply	• After loading laundry and selecting a course and a cycle, water is supplied and drum rotates. • When a user selects Pre-wash course, water is supplied through pre wash valve.
3.	Soaking & washing laundry	• To get laundry wet, drum rotates clockwise and counterclockwise. • If water amount is insufficient at this time, the Inlet valve will supply water again.
4.	Heating & washing	• The heater heats the water in drum to the selected water temperature and drum rotates for washing.
5. ~ 6.	Washing & heating / washing	• When the water temperature reaches to the selected temperature, the heating stops and only the drum rotates. • If water temperature becomes lower than selected because of re-supplied water, the heating starts again.
7.	Washing	• Fuzzy Logic decides washing time according to the laundry load, water temperature, and other factors.
8.	Drainage	• A pump motor drains the water from the drum. • After sensing drained water amount by water level frequency, spin starts. • When a heating course is selected, stay cooling process is performed to decrease the water temperature gradually to prevent laundry from being damaged and for safety reasons.
9.	Untangling (Sensing eccent-ricity)	• It balances laundry load and senses the eccentricity of the load, to only allow spinning without vibration • If the eccentricity is worse than the allowed level, it repeats the disentangling process. When the repeated time is more than allowed level, it displays UE. • If the eccentricity is good, the intermittent spin starts. • During this process, the drain pump works for drainage intermittently.

No.	Process	Explanation
A.	Intermittent spin	• To reach the correct set speed, the motor rotates clockwise and counterclockwise directions after spin process starts. • If the water level frequency is lower than 23.0 kHz, a washer senses suds and starts suds removal process.
B.	Rinse spin	• In this process, the remaining water during washing process is extracted and the selected speed is kept. • Removing suds process is in active mode at this cycle.
C.	Remaining spin	• After spin finishes, the drum rotates by remaining spin power until it stops. Motor power is off. • This process is overlapped with next process.
D.	Rinse water supply	• Water supply for rinse process
E.	Rinse	• Rinsing process.
F.	Last drainage	• After spin finishes and power is not supplied to motor, the drum rotates by remaining spin power • If rinse hold is selected, the drainage is not proceeded after rinse finishes.
G.	Disentangling	• The same as item 9.
H.	Intermittent spin	• The same as item A.
I.	Main spin1	• The same as item B.
J.	Main spin2	• At the end of a main spin, the spin speed will reach the selected rpm.
K.	Remaining spin	• The same with item C.
L.	Disentangling	• After spin finishes, disentangling starts to remove unbalanced laundry.
M.	End	• After 'end' signal is displayed, it stays for 8 seconds and power is automatically turned off. (Auto type door switch) • After door switch is off, end signal is displayed in the case of manual type and it takes around 2 minute to turn off door switch.

6. PROGRAM CHART

PROGRAM CHART

* Water Supply: W–S   * Intermittent Spin: I–S   * Disentangle: D–T

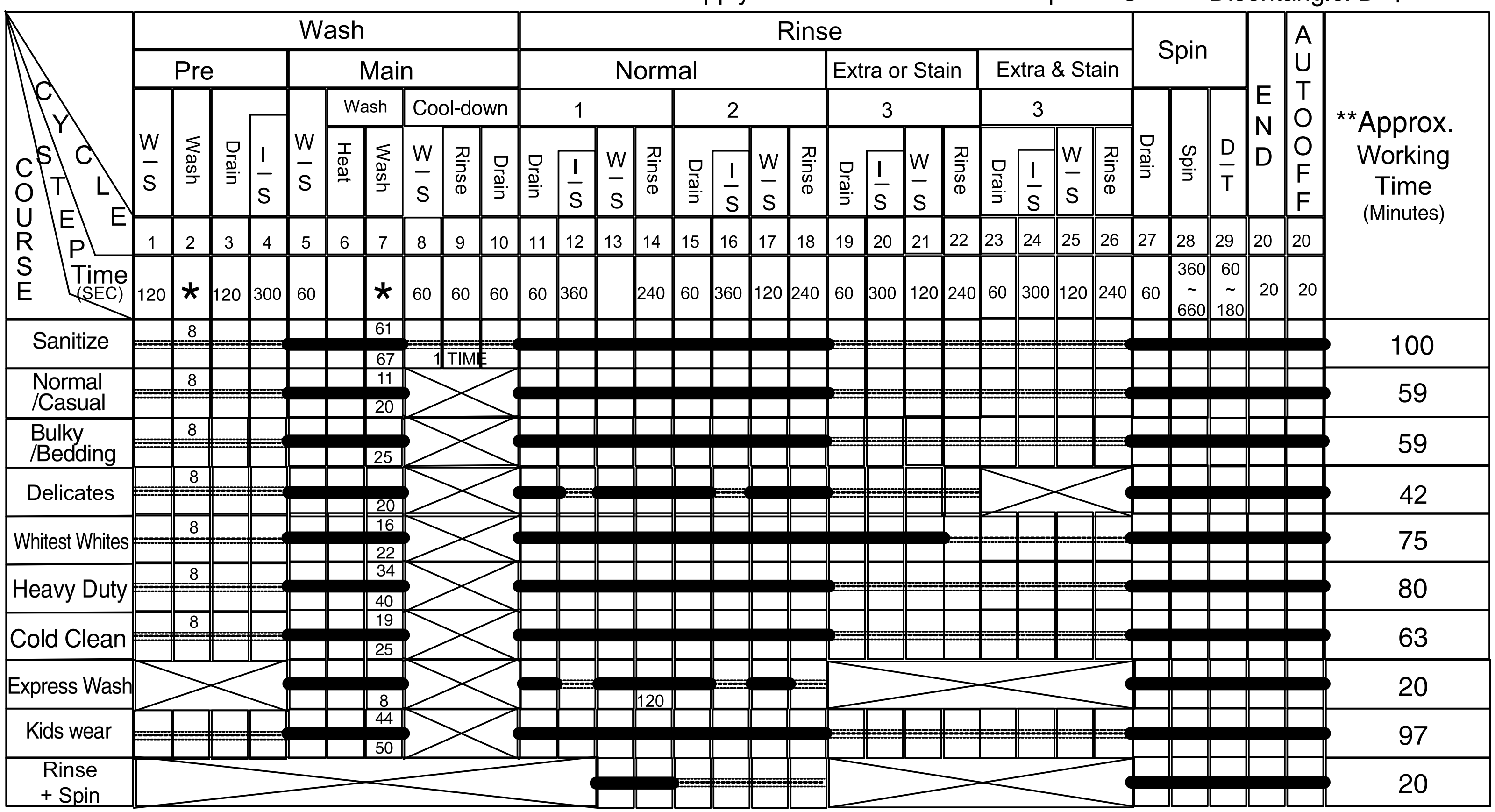

Basic Cycle

Optional Cycle

Pre-Setting Time : Water Supply - 60 sec.

Drain - 60 sec.

* Wash time is in minutes.

** The total working time will vary with the load size, water temperature and ambient temperature.

NOTE: Cycles are different depending on the models

PROGRAM CHART

* Water Supply: W–S * Intermittent Spin: I–S * Disentangle: D–T

COURSE \ CYCLE STEP	Wash										Rinse																Spin			END	AUTO OFF	**Approx. Working Time (Minutes)
	Pre				Main						Normal								Extra or Stain				Extra & Stain									
						Wash		Cool-down			1				2				3				3									
	W–S	Wash	Drain	I–S	W–S	Heat	Wash	W–S	Rinse	Drain	Drain	I–S	W–S	Rinse	Drain	I–S	W–S	Rinse	Drain	I–S	W–S	Rinse	Drain	I–S	W–S	Rinse	Drain	Spin	D–T			
	1	2	3	4	5	6	7	8	9	10	11	12	13	14	15	16	17	18	19	20	21	22	23	24	25	26	27	28	29	20	20	
Time (SEC)	120	*	120	300	60		*	60	60	60	60	360		240	60	360	120	240	60	300	120	240	60	300	120	240	60	360 ~ 660	60 ~ 180	20	20	
Rugged							53 / 59																									100
Handwash /wool							11 / 26																									53
Workout wear							23																									58
Steam Refresh							20																									20

Basic Cycle
Optional Cycle
Pre-Setting Time : Water Supply - 60 sec.
Drain - 60 sec.

* Wash time is in minutes.

** The total working time will vary with the load size, water temperature and ambient temperature.

NOTE: Cycles are different depending on the models

7. TEST MODE

7-1. SAFETY CAUTION

- There's built-in AC 110V and DC power in output terminal of PWB assembly in common. Be careful electric shock when disconnecting parts while trouble shooting. (Wear Electro Static Discharge gloves when working.)
- After cutting off the power when changing PWB assembly, disconnect or assemble.
- Be careful static when handling PWB assembly, and use Electro Static Discharge plastic pack when delivering or keeping it.

7-2. LOAD TEST MODE.

The washer must be empty and the controls must be in the off state.

1. Press the SPIN SPEED and SOIL LEVEL buttons simultaneously.
2. Press the POWER button, while the above condition. Then buzzer will sound twice.
3. Press the START/PAUSE button repeatedly to cycle through the test modes.

SYSTEM	STEAM STEP	DISPLAY	NON-STEAM STEP	DISPLAY
System or component tested or activated	START/ PAUSE	STEAM MODELS	START/ PAUSE	NON-STEAM MODELS
All LEDs lit Door locks	0	Software versions	0	Software versions
Tumble Clockwise	1	RPM (42-50)	1	RPM (42-50)
Low speed spin Drain pump	2	RPM (35-45)	2	RPM (35-45)
High speed spin Drain pump	3	RPM (110-117)	3	RPM (110-117)
Prewash cold water valve	4	Water level (0-255)	4	Water level (0-255)
Main wash cold water valve	5	Water level (0-255)	5	Water level (0-255)
Hot water valve	6	Water level (0-255)	6	Water level (0-255)
Bleach water valve	7	Steam generator water Water level (0-255)	N/A	N/A
Steam generator water valve	8	Water level (0-255)	7	Water level (0-255)
Tumble Counterclockwise	9	RPM (42-50)	8	RPM (42-50)
Tub heater (3 seconds)	10	Tub water temp in °C	9	Tub water temp in °C
Circulation pump	11	Water level (0-255)	N/A	N/A
Drain pump	12	Water level (0-255)	10	Water level (0-255)
Steam water level	13	Steam gen. water level	N/A	N/A
Steam gen. heater (1.2 seconds)	14	Steam gen. water temp	N/A	N/A
Vibration Sensors	15	bS0, bS1, bS2 or bS3	11	bS0, bS1
Exit test mode	16	Off	12	Off

NOTES:

- RPM < 220 : RPM = display / RPM > 200 : RPM = display X 10
- WATER LEVEL : o255 = empty / o248 = normal / o255 = tub clean

7-3. HOW TO CHECK THE WATER LEVEL FREQUENCY

* Press the WASH/RINSE and DELAY START button simultaneously.

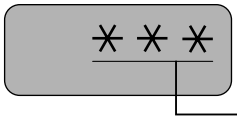

The digits indicate the water level frequency (x.1 kHz).

So, for example a display indicating 241: a Water level frequency of 241 x.1 kHz
= 24.1 kHz

8. TROUBLESHOOTING

8-1. SAFETY CAUTION

- ■ There's built-in AC 120V and DC power in output terminal of PWB assembly in common. Be careful electric shock when disconnecting parts while trouble shooting. (Wear Electro Static Discharge gloves when working.)
- ■ After cutting off the power when changing PWB assembly, disconnect or assemble.
- ■ Be careful static when handling PWB assembly, and use Electro Static Discharge plastic pack when delivering or keeping it.

8-2. ERROR MODE SUMMERY

- If you press the START/PAUSE button when an error is displayed, any error except 『PE』 will disappear and the machine will go into the pause status.
- In case of 『PE』, 『tE』, 『dE』 if the error is not resolved within 20 sec., or the in case of other errors, if the error is not resolved within 4 min., power will be turned off automatically and the error code will blink. But in the case of 『FE』, power will not be turned off.

	ERROR	SYMPTOM	CAUSE
1	WATER INLET ERROR	[redacted]	• Correct water level (246) is not reached within 8 minutes after water is supplied or it does not reach the preset water level within 25 minutes.
2	UNBALANCE ERROR	[redacted]	• The load is too small. • The appliance is tilted. • Laundry is gathered to one side. • Non distributable things are put into the drum.
3	DRAIN ERROR	[redacted]	• Not fully drained within 10 minutes.
4	OVER FLOW ERROR	[redacted]	• Water is overflowing (water level frequency is over 213). ※ If [redacted] is displayed, the drain pump will operate to drain the water automatically.
5	PRESSURE SENEOR ERROR	[redacted]	• The SENSOR SWITCH ASSEMBLY is out of order.
6	DOOR OPEN ERROR	[redacted]	• Door not all the way closed. • Loose electrical connections at Door switch and PWB Assembly. • The DOOR SWITCH ASSEMBLY is out of order.
7	HEATING ERROR	[redacted]	• The THERMISTOR is out order.

	ERROR	SYMPTOM	CAUSE
8	LOCKED MOTOR ERROR	[redacted]	• The connector (3-pin, male, white) in the MOTOR HARNESS is not connected to the connector (3-pin, female, white) of STATOR ASSEMBLY. • The electric contact between the connectors (3-pin, male, white) in the MOTOR HARNESS and 4-pin, female, white connector in the MAIN PWB ASSEMBLY is bad or unstable. • The MOTOR HARNESS between the STATOR ASSEMBLY and MAIN PWB ASSEMBLY is cut (open circuited). • The hall sensor is out of order/defective.
9	EEPROM ERROR	[redacted]	• EEPROM is out of order. ※ Displayed only when the START/PAUSE button is first pressed in the QC Test Mode.
10	POWER FAILURE	[redacted]	• The washer experienced a power failure.

8-3. TROUBLESHOOTING SUMMARY

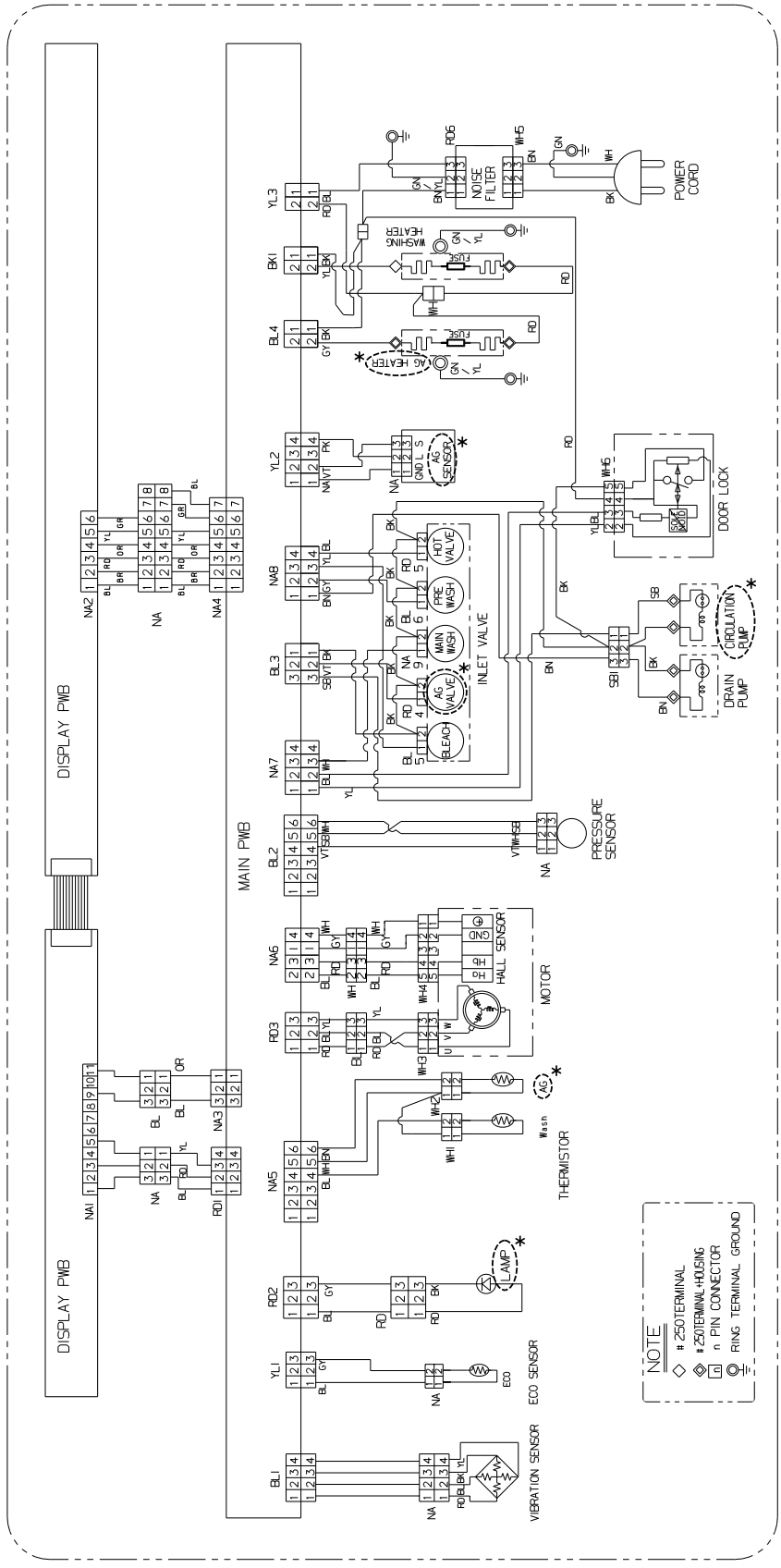

NOTE: ( )* These are only on models with the steam feature.

CIRCUIT DIAGRAM

COLOR KEY			
BK – Black	SB – Sky Blue	YL – Yellow	WH – White
BL – Blue	OR – Orange	GY – Gray	BN – Brown
RD – Red	GR – Green	NA - Natural	PK - Pink
VT – Violet			

NA2 DISPLAY PCB	
TEST POINTS	VALUE
NA2-3 RD	Ground
NA2-4 OR	12Vdc
NA2-5 YL	5Vdc

RD2 MAIN PCB - LAMP	
TEST POINTS	VALUE
RD2-1 BL	16.5Vdc

NA5 MAIN PCB - THERMISTOR	
TEST POINTS	COMPONENT
NA5-4 BL	Wash Thermistor
NA5-6 BN	AG Thermistor

RD3 and NA6 MAIN PCB - MOTOR	
TEST POINTS	COMPONENT
RD3-1 RD	U
RD3-2 BL	V
RD3-3 YL	W
NA6-1 GY	+
NA6-2 BL	Hb
NA6-3 RD	Ha
NA6-4 WH	GND

NA6 MAIN PCB – MOTOR		
TEST POINTS	RESISTANCE	REMARKS
NA6-1 GY to 2 BL	8-12 Ω	
NA6-1 GY to 3 RD	8-12 Ω	
NA6-1 GY to 4 WH	10-15 Vdc	Voltage (input)
NA6-2 BL to 4 WH	10 Vdc	Pulsing Signal
NA6-3 RD to 4 WH	10 Vdc	Pulsing Signal

NA7 MAIN PCB - DOOR SWITCH	
TEST POINTS	COMPONENT
NA7-1 YL	PTC
NA7-2 BL	PTC

NA7, BL3 and NA8 MAIN PCB – INLET VALVE	
TEST POINTS	COMPONENT
NA7-3 WH	Main Wash
BL3-1 BK	Common
BL3-2 VT	AG Valve
NA8-2 GY	Pre Valve
NA8-3 YL	Bleach
NA8-4 BL	Hot Valve

BL3, NA8 and SB1 MAIN PCB - PUMPS		
TEST POINTS	COMPONENT	CONDITION
BL3-3 SB	Common	Pump running
NA8-1 BN	Drain Pump	Pump stopped
SB1-1 SB, 2 BK	Recirc Pump*	Drain pump disconnected

YL2 MAIN PCB – AG SENSOR	
TEST POINTS	COMPONENT
YL2 -1 NA	Ground
YL2 -2 VT	S
YL2 -4 PK	L

BL4, BK1 and YL3 MAIN PCB - HEATER		
TEST POINTS	COMPONENT	RESISTANCE
BL4-2 GY, BK1-2 YL	Vac (input)	12 Ω - 18 Ω
BL4-1 BK	Steam Generator/ Heater (input)	
BK1-2 YL	Wash Heater (input)	
YL3-1 BL	Steam Generator/ Heater (output)	
YL3-2 RD	Vac (output)	

WH1 MAIN PCB – TUB THERMISTORS			
TEST POINTS	COMPONENT	TEMPERATURE	RESISTANCE
WH1 -1 WH	Common	86°F (30°C)	39.5 kΩ
		104°F (40°C)	26.1 kΩ
		140°F (60°C)	12.1 kΩ
WH1 -1 WH, - 2 BL	Tub Thermistor	158°F (70°C)	8.5 kΩ
		203°F (95°C)	3.8 kΩ
		221°F (105°C)	2.8 kΩ

WH2 MAIN PCB – STEAM THERMISTOR			
TEST POINTS	COMPONENT	TEMPERATURE	RESISTANCE
WH2 -2BN	Steam Thermistor*	86°F (30°C)	39.5 kΩ
		104°F (40°C)	26.1 kΩ
		140°F (60°C)	12.1 kΩ
		158°F (70°C)	8.5 kΩ
		203°F (95°C)	3.8 kΩ
		221°F (105°C)	2.8 kΩ
		241°F (116°C)	2.1 kΩ
		266°F (130°C)	1.4 kΩ
		293°F (145°C)	1.0 kΩ
		320°F (160°C)	0.7 kΩ
		356°F (180°C)	0.4 kΩ

WH3 MAIN PCB – MOTOR	
TEST POINTS	RESISTANCE
WH3 -1 BL to 2 RD	5-15 Ω
WH3 -2 RD to 3 YL	5-15 Ω
WH3 -3 YL to 1 BL	5-15 Ω

NA9 INLET VALVE– MAIN WASH	
TEST POINTS	RESISTANCE
NA9 -1 WH to 2 BK	0 Ω-15 kΩ

RD6 and WH5 POWER CORD– NOISE FILTER	
TEST POINTS	RESISTANCE
WH5-1 BK to RD6-3 BL	0 Ω
WH5-3 BN to RD6-1 BN	0 Ω

WH6 MAIN PCB – DOOR LOCK		
TEST POINTS	TEMPERATURE	RESISTANCE
WH6-2 YL to 4 RD	77°F (25°C)	700-1500 Ω
WH6-3 BL to 4 RD	77°F (25°C)	60-90 Ω
WH6-4 RD to 5 BK		Infinity
WH6-2 YL to 4 RD	Voltage Input	120 Vac

* Only on steam models

8-4. TROUBLESHOOTING WITH ERROR

INLET VALVE ERROR

Is [redacted] displayed?

Yes

When you press both **WASH/RINSE** button and **DELAY START** button simultaneously, is the water level < 246?

Yes → Check the AIR CHAMBER and the tube (clogged).

No

Is filter inlet valve clogged with foreign material?

Yes → Clean or replace the filter.

No

Check the connectors at the main PCB and the water valve. Are the connectors loose or disconnected?

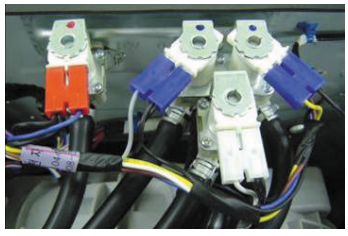

Yes → Reconnect or repair the connector.

No

Is the resistance of fill valve coil between 800 and 1200 Ω?
(Refer to 9-5 inlet valve assembly.)

No → Replace the INLET VALVE ASSEMBLY.

Yes

Proceed to next step at right.

Is the voltage at the inlet valve coil 120VAC with the valve energized?

Yes → Replace the INLET VALVE ASSEMBLY.

No

Is the wiring correct? Refer to the wiring diagram for correct connections.
(Refer to 9-5 wiring diagram)

No → Replace the MAIN HARNESS.

Yes

Is the water level still < 246?

Yes → Check the pressure switch. Refer to test #2.

No

Replace the MAIN PWB ASSEMBLY.

ALWAYS CHECK FOR EXTERNAL CAUSES

Water supply shut off
Frozen water lines
Kinked fill hose
Low water pressure

DRAIN ERROR

Is [redacted] displayed?

Yes

Check the connectors at the main PCB and the drain pump. Are the connectors loose or disconnected?

Yes → Reconnect or repair the connector.

Drain pump

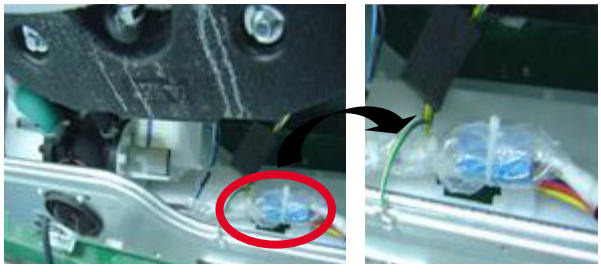

Connection connector

No

When you press both **WASH/RINSE** button and **DELAY START** button simultaneously, is the water level <250?

No → Check the air dome and pressure hose for clogging. Check the pressure switch. See test #2.

Yes

Proceed to next step at right

Measure the resistance of the drain pump motor. Is the resistance between 10Ω and 20Ω ?
(Refer to 9-4 Pump motor assembly.)

Yes → Replace the DRAIN PUMP ASSEMBLY.

No

Check the voltage between the main PCB connectors NA4-1 BN and BL3-1 BK. Is the voltage 120 VAC ± 5%?

No → Replace the MAIN PWB ASSEMBLY.

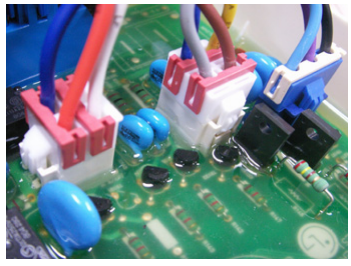

TO TURN ON THE DRAIN PUMP:

1. Turn on the washer
2. Press the SPIN SPEED button to select LOW speed.
3. Press the START/PAUSE button.
   The drain pump will be energized for several minutes at the beginning of the spin cycle.

ALWAYS CHECK FOR EXTERNAL CAUSES

Kinked or clogged drain hose
Frozen drain hose
Foreign objects clogging the drain pump filter
Foreign objects caught in pump impeller

HEATING ERROR

Is [redacted] displayed?

Yes

Check the connectors at the main PCB, the heater and the thermistor. Are the connectors loose or disconnected?

Yes → Reconnect or repair the connector.

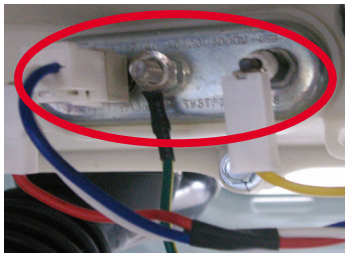

Wash heater

No

Check the resistance of the heater. Is the resistance between 12Ω and 18Ω ?
(Refer to 9-6 Heater assembly.)

No → Replace the HEATER ASSEMBLY.

Yes

Proceed to next step at right

Is the connector connected to thermistor disconnected or disassembled?

Yes → Reconnect or repair the connector.

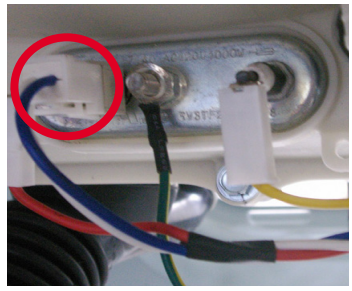

Wash thermistor

No

Check the thermistor resistance. Is the resistance correct according to the chart?
(Refer to 9-7 thermistor assembly.)

Yes → Replace the THERMISTOR ASSEMBLY.

No

Are the thermistor terminals dry and free of corrosion?

Yes → Replace the THERMISTOR ASSEMBLY.

[Note]
The temperature sensing circuits on the main PCB are very simple, consisting only of resistors and capacitors. Problems with wiring or connections in the thermistor circuit are the most likely cause for this error. Be sure to check ALL connections and wiring thoroughly. The main PCB should only be replaces as a last resort, as it is unlikely to be the cause.

LOCKED MOTOR ERROR

Is [redacted] displayed?

Yes

Check the connectors at the main PCB and the main motor. Are the connectors loose or disconnected?
Main PCB connectors RD3 and NA4
Motor connectors to stator and hall sensor

Yes → Reconnect the connector. (connector / wire / motor)

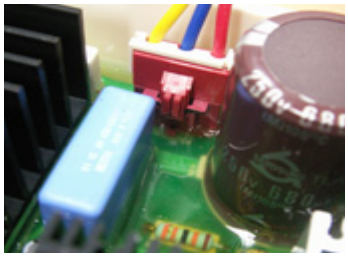

Motor Drive

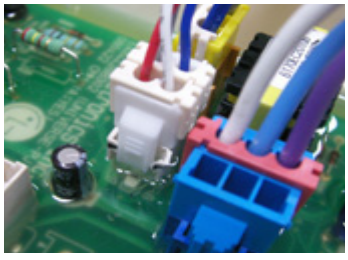

Hall sensor

- part of wire

- part of motor

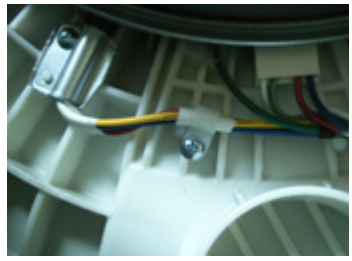

Motor

Yes

Check the resistance of the stator winding from the main PCB connector RD3. Is the resistance between each pair or wires between 5 and 15 ? (Measure pins 1-2, 1-3 and 2-3.)

No → Replace the STATOR.

Yes

Is hall sensor out of order? (Refer to 9-3 Stator assembly/Hall sensor.)

Yes → Replace the Hall sensor.

No

Check the IPM in the controller.

No → Replace the MAIN PWB ASSEMBLY.

Is rotor magnet cracked?

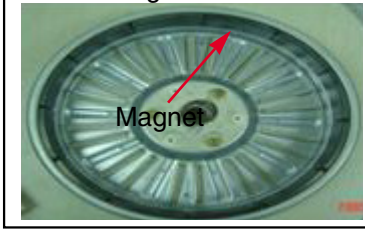

Yes → Replace the ROTOR.

DOOR OPEN ERROR

Is [redacted] displayed?

Yes

Check the connectors at the main PCB and the door switch. Are the connectors loose or disconnected?

Yes → Reconnect or repair the connector

No

Is the door closing properly? Is the gasket damaged and interfering with the door or latch? Are there foreign objects caught in the door? Is the hinge damaged?

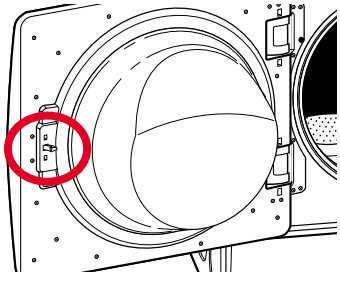

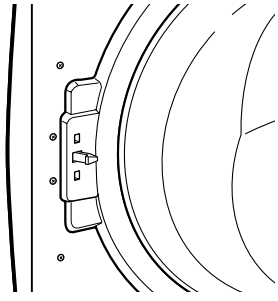

No → Replace Door Assembly

Yes

Prceed to next step at right

Is the spring in the door latch hook on the door strong and tight?

No → Replace gasket or hinge. Remove foreign objects.

Yes

Can you hear the door latch attempting to lock the door at the beginning of the cycle or diagnostic mode?

No → Replace the PCB ASSEMBLY.

Yes

If tested off the stator using the diagram above ohm check the resistors from pin 5 to pin 1 & pin 2. Does either test show an open (infinity) the hall sensor? (You should measure approximately 10,000 ohms from pin 5 to pin 1 and 10,000 ohms from pin 5 to pin)

No → Replace the DOOR SWITCH ASSEMBLY.

UNBALANCE ERROR

Is [redacted] displayed?

Yes

Does the laundry lean toward one side, not evenly put in the DRUM assembly?

Yes → Put laundry evenly In the DRUM assembly

No

Is the washing machine installed at an angle?

Yes → Adjust the height of washing machine to be kept horizontally

[Note] Environmental check list

1) Removal of transportation-based fixed bolt.
2) Confirmation on the material to see if it is capable of handling two different types of blanket materials.

OVER FLOW ERROR

Is [redacted] displayed?

Yes

While a cycle is running, press the WASH/RINSE and DELAY START buttons together to display the water level. Is the water level >213? (Refer to 7-3)

No → Check the AIR CHAMBER and the tube (clogged).

Yes

Unplug the washer. Does the water valve remain on when the power is removed from the washer?

No → If the water valve is energized as soon as the washer is plugged in or when the power button is pressed, replace the main PCB.

Yes

Replace the INLET VALVE ASSEMBLY

PRESSURE SENSOR ERROR

Is [redacted] displayed?

Yes

Check the connectors at the main PCB and the pressure switch. Are the connectors loose or disconnected?

Yes → Reconnect or repair the connector

No

Measure the resistance between pins 1 and 3 of the pressure switch. Is the resistance between 21Ω and 23Ω ?

No → Replace the pressure switch

Yes

Is the AIR CHAMBER and the tube clogged?

Yes → Fix the air chamber and remove the foreign material.

No

Replace the MAIN PWB assembly.

8-5. TROUBLE SHOOTING ELSE

⚠ CAUTION

1. Be careful of electric shock if disconnecting parts while troubleshooting.
2. First of all, check the connection of each electrical terminal with the wiring diagram.
3. If you replace the MAIN PWB ASSEMBLY, reinsert the connectors correctly.

NO POWER

Is the supplied voltage 120V AC?(+10%, -15%)

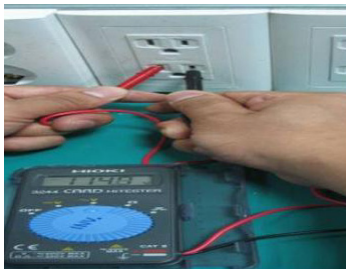

No → Check the fuse or reset the circuit breaker

Yes ↓

Is the current rating of multi-outlet power strip enough?
(Avoid connecting several electric devices.)

No → Alternate with explanation

Yes ↓

Check the connectors at the main PCB and the line filter. Are the connectors loose or disconnected?

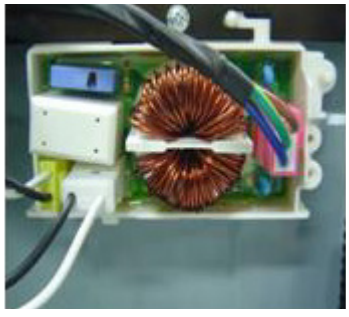

Yes → Reconnect or repair the connector

No ↓

Is LED on while the power is on?

No → Replace the MAIN PWB ASSEMBLY

Yes ↓

Is three pin wire of display PWB broken?

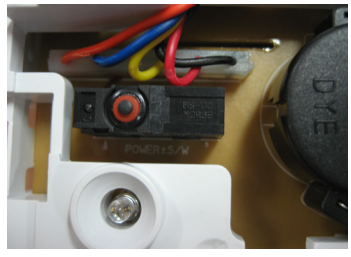

Display PWB

No → Replace the DISPLAY PWB ASSEMBLY

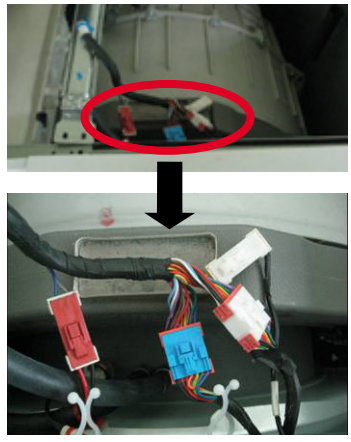

Connecting connector MAIN PWB~ Display PWB

BUTTON DOESN'T WORK

Check the connectors at the main PCB and the line filter. Are the connectors loose or disconnected?

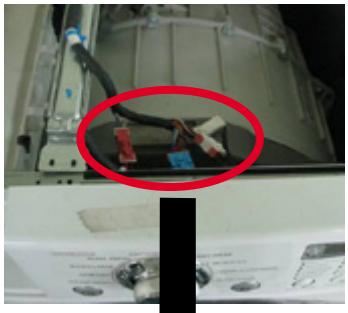

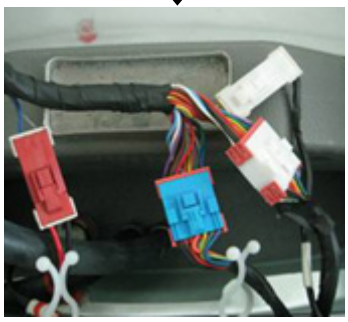

Yes → Reconnect or Repair the connector

No ↓

Check the connectors between the main PCB and the display PCB. Are the connectors loose or disconnected?

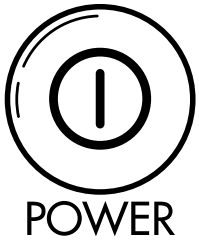

Yes → Replace the main PCB.

No ↓

Replace the main PCB.

VIBRATION & NOISE IN SPIN

Have all the transit bolts and base packing been removed?

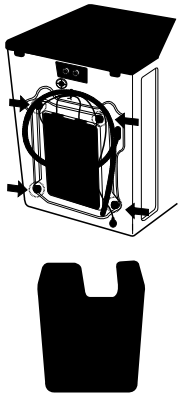

Base Packing

No → Remove the transit bolts and Base packing.

Yes ↓

Is the washer installed on a solidly constructed floor?

No → Move the washer or reinforce the floor.

Yes ↓

Check if the washer is perfectly level as follows:

Check the leveling of the washer with a level and check that the washer is stable.

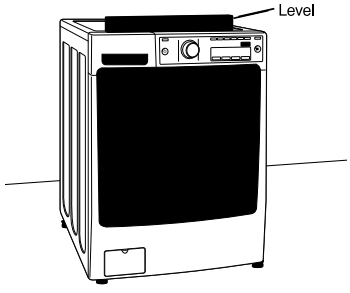

Put an unbalance part (rubber) inside of drum and start QC test mode and run in high spin.
(Refer to section 7-2.)
When the machine is spinning in high speed, verify that it is stable.

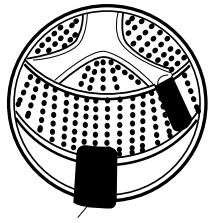

Unbalance Part

If you do not have the unbalance part, put 4.5 to 6.5 lbs (2 to 3 kg) of clothing. Once loaded, press power, Rinse+Spin and the start/pause button in sequence.
When the machine is spinning in high speed, verify that it is stable.

Yes ↓

If it is not stable, adjust feet accordingly. After the washer is level, tighten the lock nuts up against of the base of the washer. All lock nuts must be tightened.

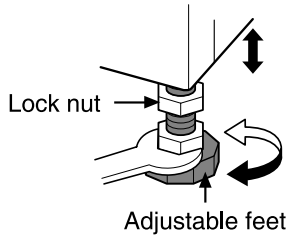

Yes → Check the vibration Sensor.

DETERGENT DOES NOT FLOW IN

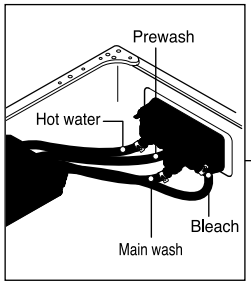

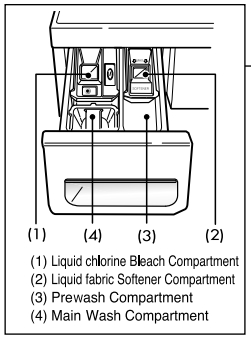

Is water supplied?

NO → Refer to NO WATER SUPPLY

YES ↓

Are receptacles correctly connected to the terminals of the INLET VALVE ASSEMBLY?

NO → Check the wiring.

YES ↓

Has detergent been put in the correct compartment of the dispenser?

NO → Put the detergent in the correct place.

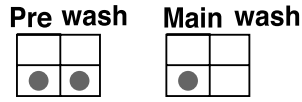

● : Detergent

YES ↓

Is the detergent caked or hardened?

YES → Clean the dispenser.

LIQUID DETERGENT/SOFTENER/BLEACH DOES NOT FLOW IN

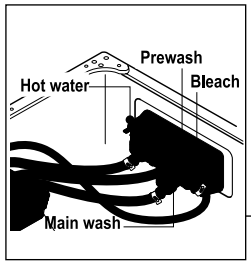

Is water supplied?
- NO → Refer to NO WATER SUPPLY
- YES ↓

Are the plugs correctly connected to the terminals of the INLET VALVE ASSEMBLY?
- NO → Check the wiring on the dispenser.
- YES ↓

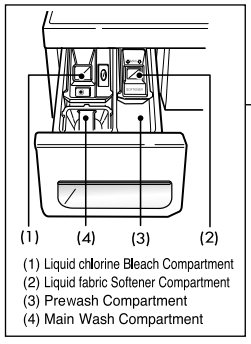

Is liquid detergent/softener/bleach put in the correct compartment of the drawer?
- NO → Put it in the correct compartment.
- YES ↓

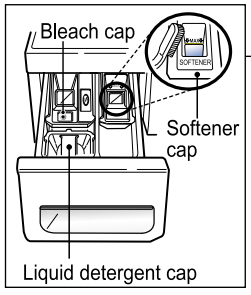

Is the liquid detergent/softener/bleach cap clogged?
- YES → Clean the cap and Container.

ABNORMAL SOUND

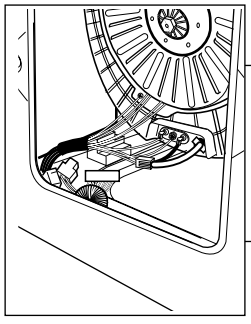

Is the motor bolt loosened?
- YES → Secure the bolt.
- NO ↓

Is there friction noise coming from the motor?
- YES → Check hall sensor. Replace If defective. Then check stator. Replace if necessary. Check rotor for broken magnets. Replace rotor if necessary.

9. COMPONENT TESTING INFORMATION

⚠ WARNING When Resistance (Ohm) checking the Component, be sure to turn the power off, and do voltage discharge sufficiently.

9-1. FILTER ASSEMBLY (LINE FILTER)

Circuit diagram

Circuit in the MAIN PWB/Circuit diagram

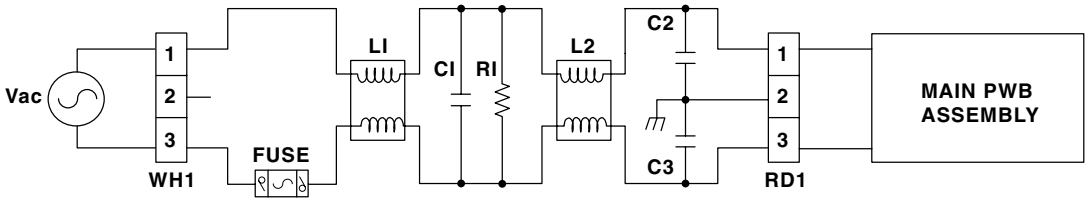

Test points and Result

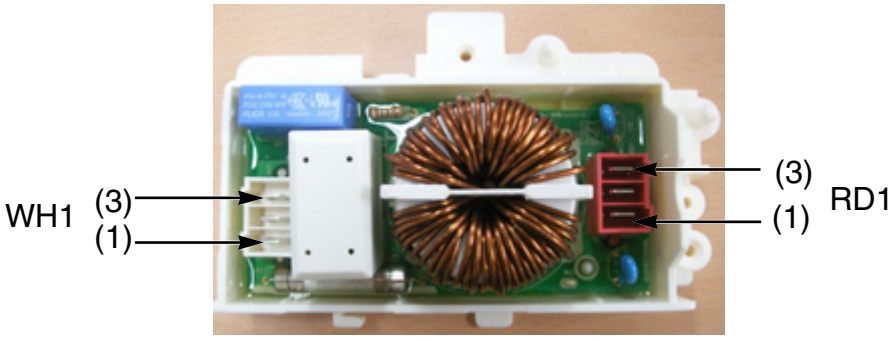

Test Points	Result
WH (1) to RD (3)	0 Ω
WH (3) to RD (1)	0 Ω

9-2. DOOR LOCK SWITCH ASSEMBLY

Circuit diagram	**Circuit in the MAIN PWB** 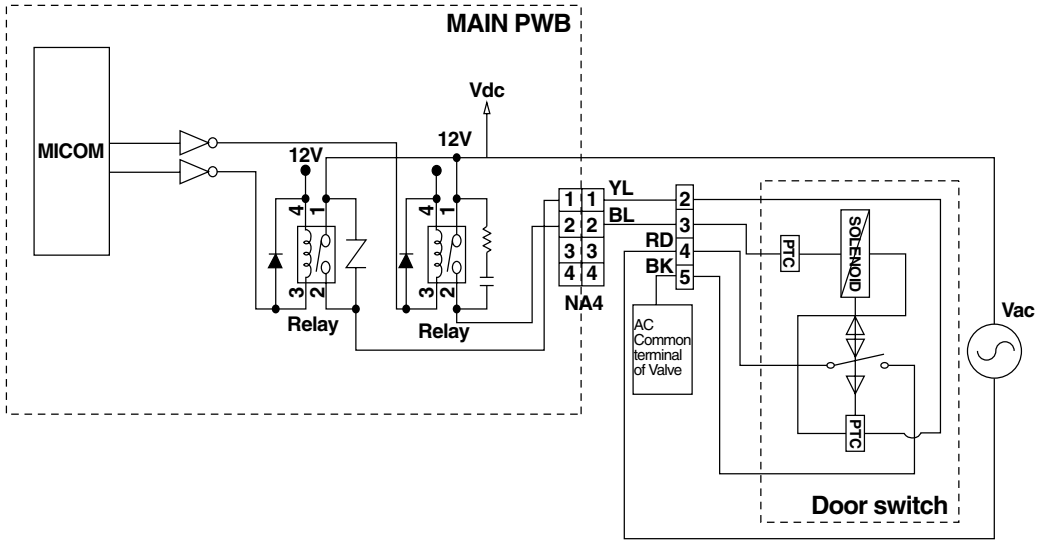
Function	The Door Lock Switch Assembly consists of a Heating PTC, a Bimetal, a Protection PTC, and a Solenoid. It locks the door during a wash cycle. 1. Operation for door closing - After the system turns on, PTC heating starts up through terminal 2~4's authorizing the power on. - After PTC heating starts up and before solenoid operation is driven, force the system to the off position through CAM. ⇒ Door close - Authorizing one impulse through terminal 3~4 (PTC & solenoid) will make the door locked. - Door lock is detected when switches in terminal 4~5 are set closed. ⇒ CAM rotation will forcibly clear off the connection. The maximum, allowable number of impulse authorizations is 2 ⇒ Upon the third authorization of the impulse, the position of CAM goes back to the door-open position. - Authorizing the impulse occurs in 4.5 seconds upon input for max performance and two authorization processes are allowed at most. ⇒ Normal operation period of PTC heating: 1.5 - 5 seconds (Defects from the development process) 2. Operation for door opening - With a temporary stop, door automatically opens by CAM rotations after authorizing the impulse from the terminal 3 ~ 4 and the power turns off - maximum of 3 times of the authorizing period - Upon the fourth authorization of the impulse, the position of CAM goes back to the door-close position.

Test points

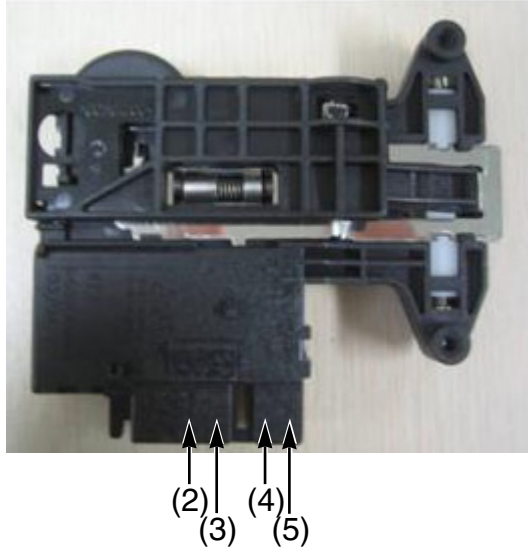

Result

Test Points	Result	Remarks
(2) to (4)	700-1500 Ω	At 77°F (25°C)
(3) to (4)	60-90 Ω	At 77°F (25°C)
(4) to (5)	Infinity	
(2) to (4)	120 Vac	Voltage Input

9-3. STATOR ASSEMBLY

Circuit diagram

Circuit in the MAIN PWB

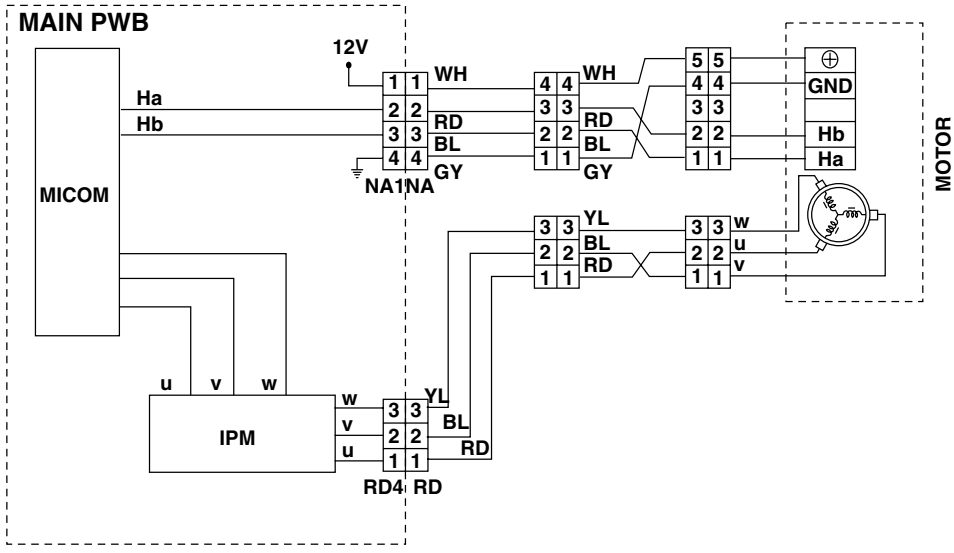

Function

The DD motor can be driven from stopped to maximum speed in infinite steps in either direction. There are 36 poles on the stator; 12 permanent magnets spaced around the rotor. There are no brushes to wear out. Unlike a more traditional brushless motor, the rotor surrounds the stator rather than being attached to it.

Test points (Windings)

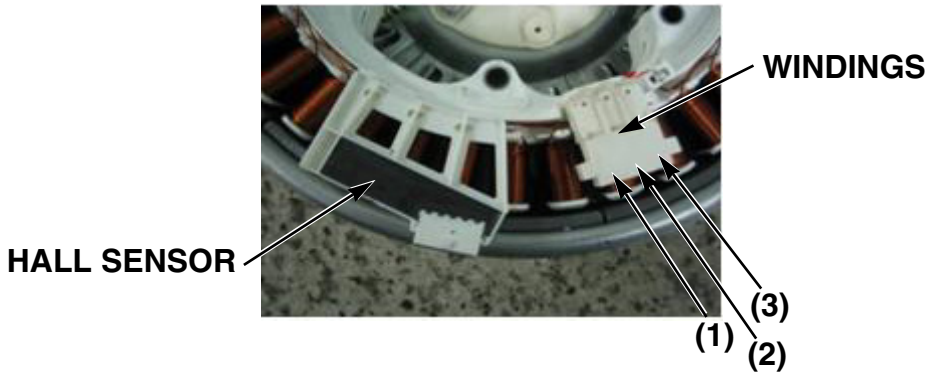

Result (Windings)

Test Points	Result
(1) to (2)	5-15 Ω
(2) to (3)	5-15 Ω
(3) to (1)	5-15 Ω

	The hall sensor determines the speed and direction of the motor. It also can read that the load is off balance when the drum speed fluctuates.
Test point **and** **Result (Hall Sensor)**	**- Voltage Testing Hall Sensor at Stator** 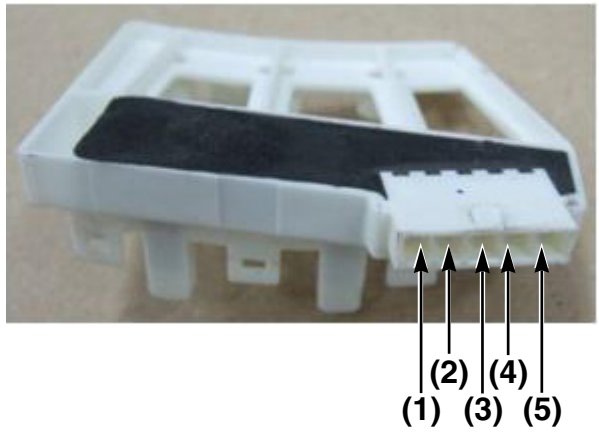 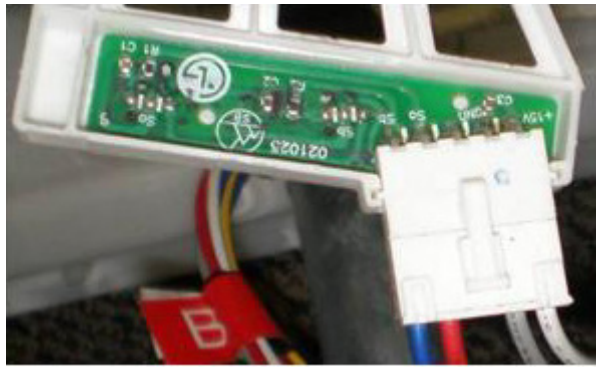 If measuring voltage from the Main PCB Assembly to the Hall Sensor, use the following steps: 1. Unplug power cord. 2. Remove rear washer panel. 3. Locate Hall sensor connector on the stator behind the rotor. 4. Place meter leads on terminals 5 to 4, white to gray. 5. Plug in power cord, close door, and press power button. DO NOT PRESS START! 6. You should measure 10 to 15 Vdc. If 10 to 15 Vdc is present, control board, white wire, and gray wire are OK! If not follow testing output voltages on control board in next section.

7. To measure output signal voltage from the hall sensor, carefully move test leads to terminals 1 to 4, blue and gray. Slowly rotate motor rotor by hand. You should read a pulsing 10 Vdc. If 10 Vdc is measured from 1 to 4, move lead on blue wire to red wire, terminal 2. Repeat rotating motor rotor by hand. You should read a pulsing 10 Vdc from red to gray.
8. If pulsing 10 Vdc is measured from 1 to 4 and 2 to 4, hall sensor is OK! If either test netted only 9 to 10 Vdc without changing (no pulsing) the hall sensor is likely defective. Disconnect power by unplugging washer and ohm check hall sensor to verify failure of the hall sensor.

Test Point and Result (Hall Sensor)

- Voltage Testing Hall Sensor from the Main PCB Assembly

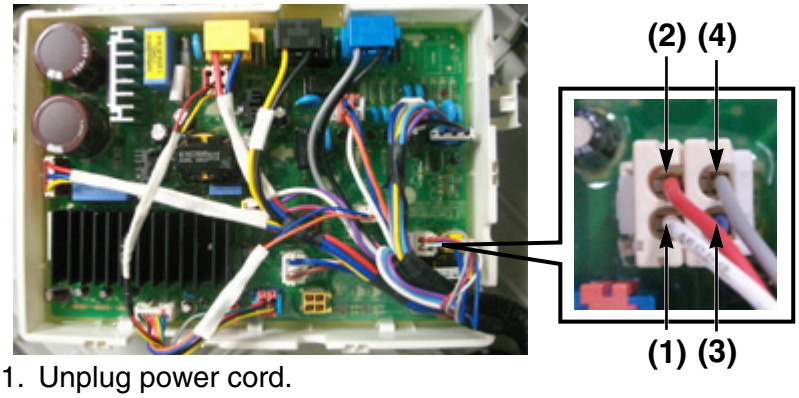

1. Unplug power cord.
2. Remove rear panel.
3. Remove Washer Top.
4. Remove Main PCB Assembly cover as shown in Figure below.
5. Locate the white Hall Sensor 4 wire connector using wiring diagram wire colors as your guide.
6. Plug in power cord, close door, and press power button. DO NOT PRESS START!
7. Place meter leads on White & Gray wires. You should read 10 to 15 Vdc output from the Main PCB Assembly to the Hall sensor. If no 10 to 15 Vdc is measured the control board is defective.
8. Place meters leads on Blue to Gray. Turn motor rotor slowly by hand. You should measure a pulsing 10 Vdc. Place meter leads on Red to Gray. Turn motor rotor slowly by hand. You should measure a pulsing 10 Vdc. If both tests measure a pulsing 10 Vdc, hall sensor and harness OK. If either or both tests measures 9 to 10 volts, but does not pulse or change, Hall sensor has failed and must be replaced. IF zero (0) voltage is measured on either test, check red & blue wires for continuity. Repair or replace harness as needed.

Test Points	Result	Remarks
(1) to (2)	8-12 kΩ	
(1) to (3)	8-12 kΩ	
(1) to (4)	10-15 Vdc	Voltage Input
(2) to (4)	10 Vdc	Pulsing Signal
(3) to (4)	10 Vdc	Pulsing Signal

9-4. PUMP MOTOR ASSEMBLY

Circuit diagram

Circuit in the MAIN PWB

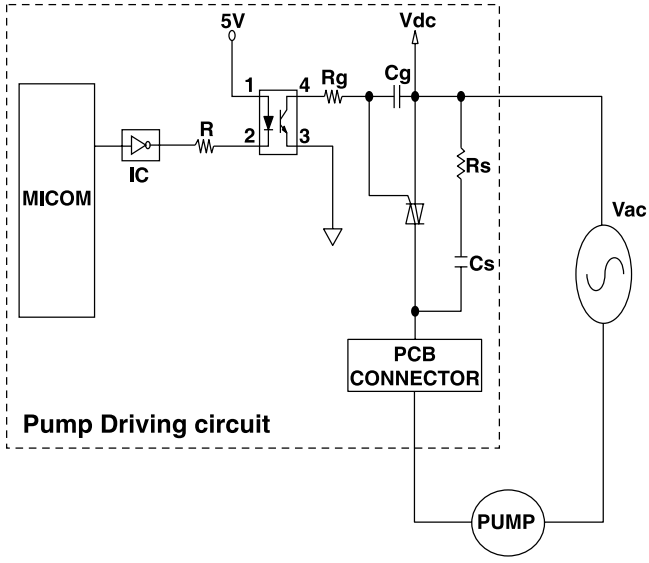

Circuit diagram

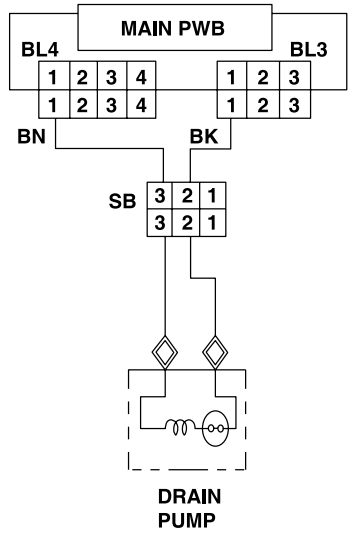

* Each circuits of loads in wiring diagram are all same.

Object

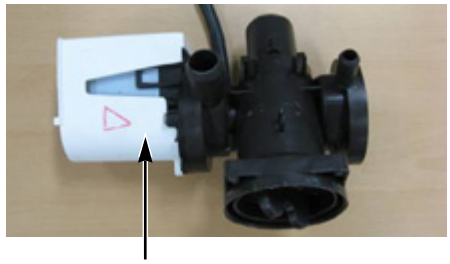

For Drain

Function

Two pump motors are used to drain the tub and to circulate the water / detergent solution.

Test points

Drain Pump

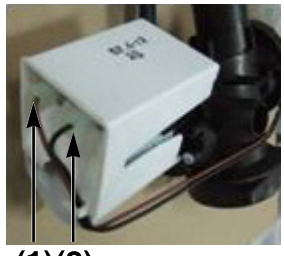

(1)(2)

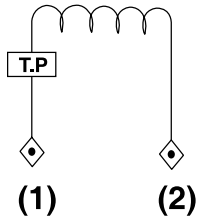

Result

Drain Pump

Test Points	Result
(1) to (2)	10-20 Ω

9-5. INLET VALVE ASSEMBLY

Circuit diagram

[redacted]

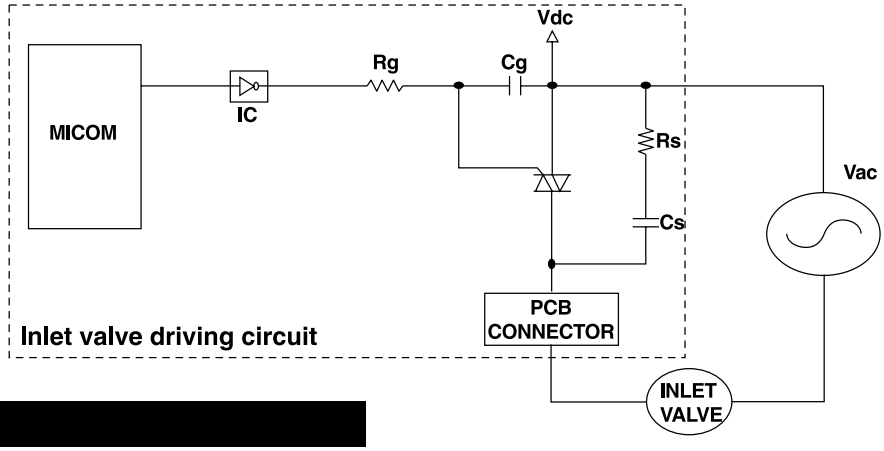

[redacted]

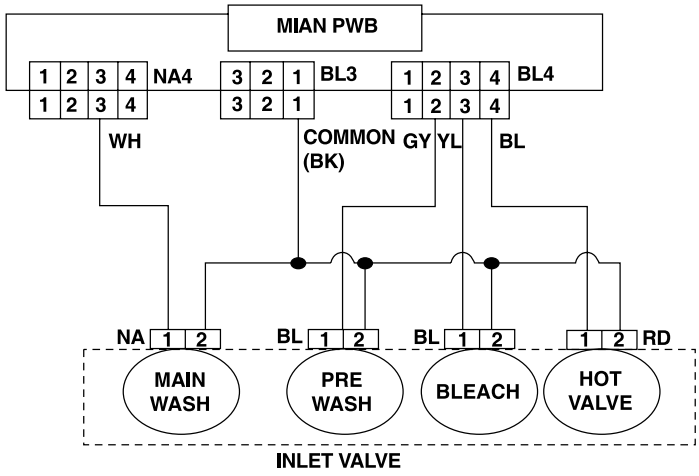

* Each circuits of loads in wiring diagram are all same.

Function

Depending on the cycle and water temperature, the controller will energize the hot or cold water valve solenoids to meet the selected water temperature.

Test points and Result

After pull out the connector of defective valve, check the resistance.

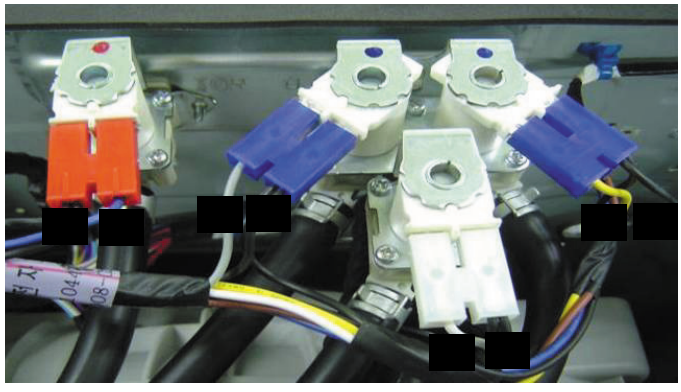

Test points	(1)-(2)
Result	0.8-1.2 kΩ

9-6. HEATER ASSEMBLY

Circuit diagram

Circuit in the MAIN PWB

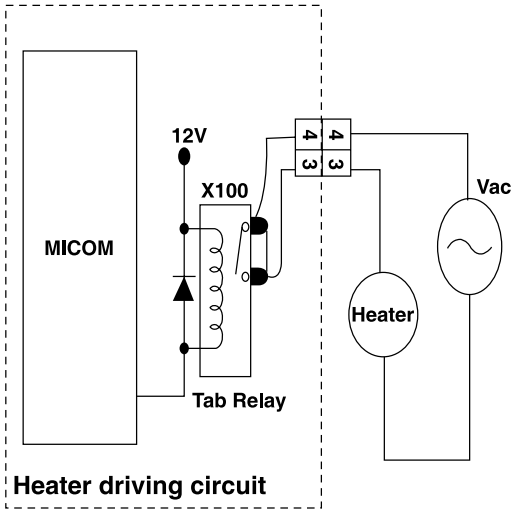

Circuit diagram

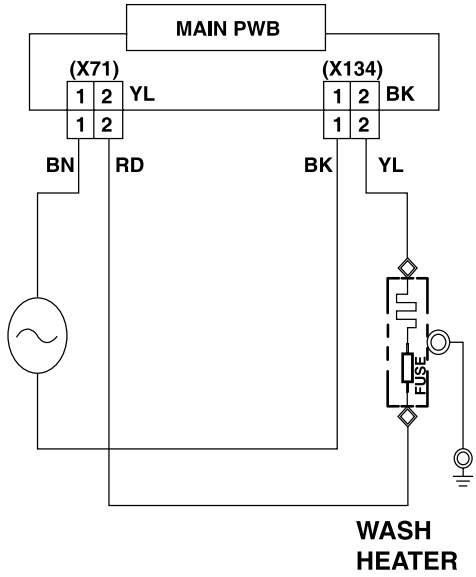

* Each circuits of loads in wiring diagram are all same.

Function

1. The Wash Heater is designed to raise the wash water to the desired temperature selection during certain wash cycles.

Test points

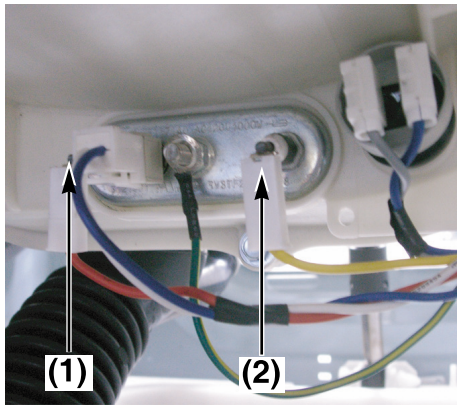

Wash Heater

Result

Wash Heater

Test Points	Result
(1) to (2)	12-18 Ω

9-7. THERMISTOR ASSEMBLY

Circuit diagram

Circuit in the MAIN PWB / Circuit diagram

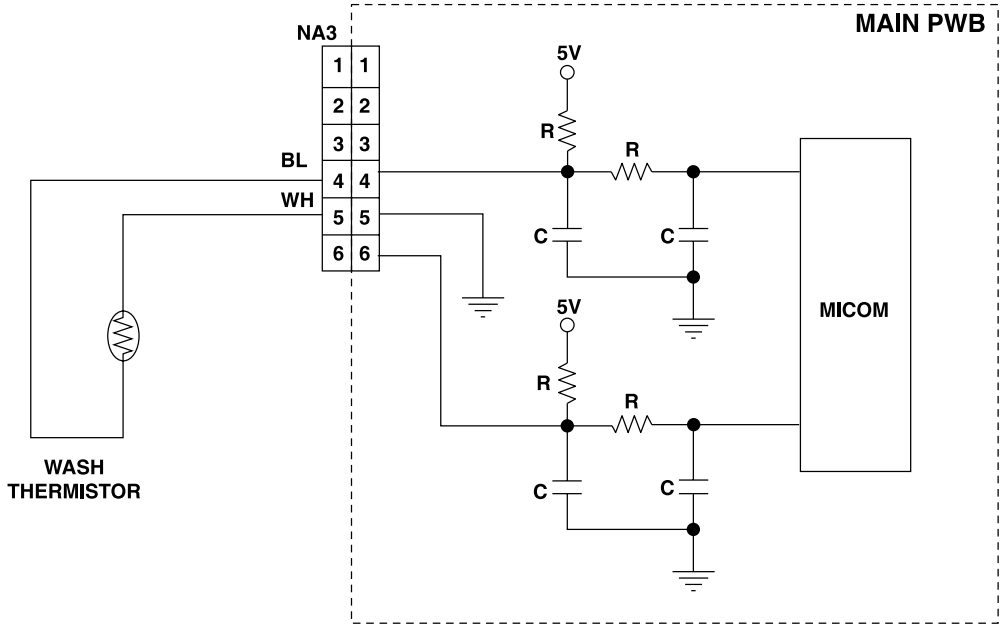

Function

The thermistor (temperature sensor) is used to monitor water temperature in the tub.

Test points & Result

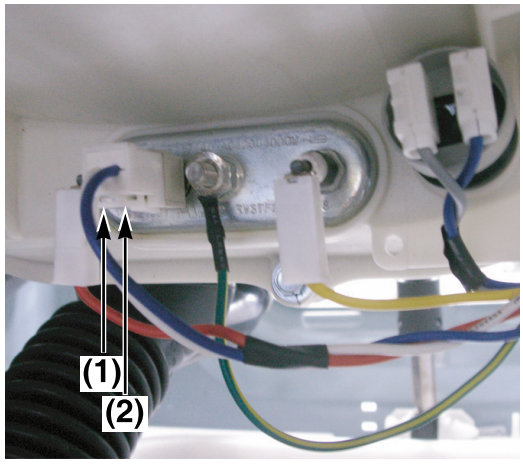

Wash Thermistor

Test Points	Result (tolerance ±5%)	Remarks
(1) to (2)	39.5 kΩ	At 86°F (30°C)
	26.1 kΩ	At 104°F (40°C)
	12.1 kΩ	At 140°F (60°C)
	8.5 kΩ	At 158°F (70°C)
	3.8 kΩ	At 203°F (95°C)
	2.8 kΩ	At 221°F (105°C)

Result	

Wash Thermistor

Test Points	Result (tolerance ±5%)	Remarks
(1) to (2)	39.5 kΩ	At 86°F (30°C)
	26.1 kΩ	At 104°F (40°C)
	12.1 kΩ	At 140°F (60°C)
	8.5 kΩ	At 158°F (70°C)
	3.8 kΩ	At 203°F (95°C)
	2.8 kΩ	At 221°F (105°C)

Function	**2) Operation mechanism of Steam generator** After supplying some amount of water through inlet valve and water level sensor, Heater operates and steam generates. Generated steam is sprayed by nozzle. If the water in the steam generator is reduced by spraying steam, water level sensor decide to supply water or not. **3) Operation method of Steam generator** The Steam Generator Assembly is supplied as an assembly only; parts like the water level sensor, thermistor, or heater cannot be replaced individually. Diagnosis is limited to determining malfunction and replacing as an assembly. The steam generator does not have to be removed from the machine to be drained. Be sure to let the water cool to avoid a burn. Have a hose available to slip onto the connector or a large towel to catch the water so it doesn't run down into the machine cabinet. If you remove the steam generator before draining it, be sure to avoid tipping it and spilling the water.
	2. Water level sensor **1) Structure of water level sensor** 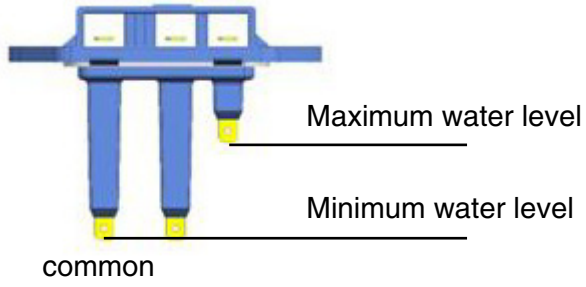 **2) Function of Water level sensor** It is the part of sensing water level. It decides to supply water or not when the steam generate. (to protect heater)

10. DISASSEMBLY INSTRUCTIONS

✻ Be sure to unplug the machine before disassembling and repairing the parts.

CONTROL PANEL ASSEMBLY

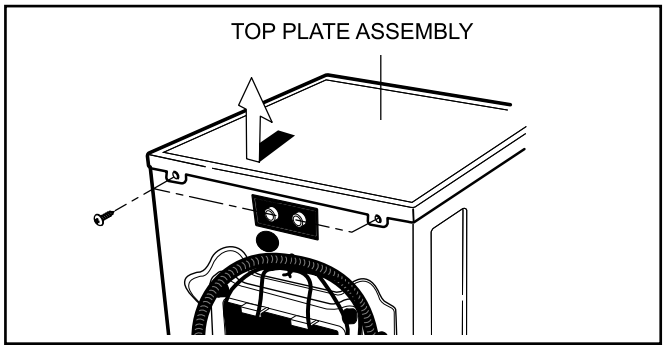

① Unscrew 2 screws on the back of the top plate.

② Pull the top plate backward and upward as shown.

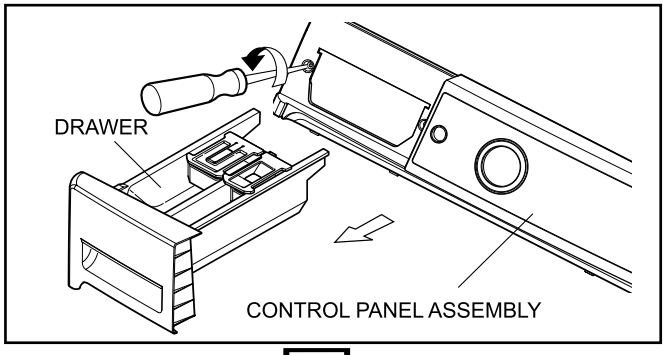

③ Disconnect the Display PWB assembly connector from trans cable.

④ Pull out the drawer and unscrew 2 screws.

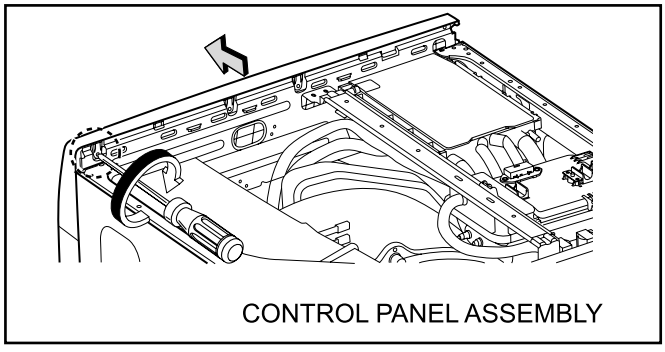

⑤ Remove one screw.

⑥ Lift the side the control panel assembly and pull it out

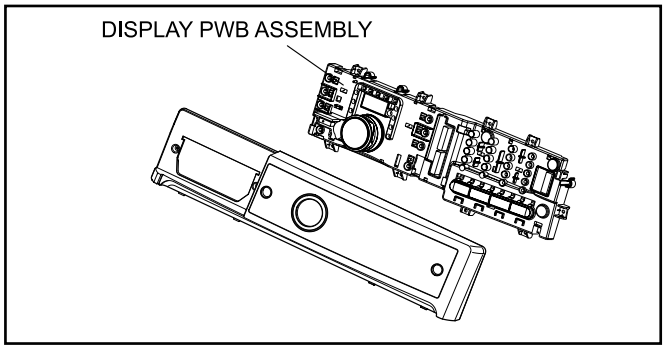

⑦ Unscrew the 9 screws(M4), 1 screw(M3) from the control panel assembly.

⑧ Disassemble the Display PWB Assembly.

MAIN PWB ASSEMBLY

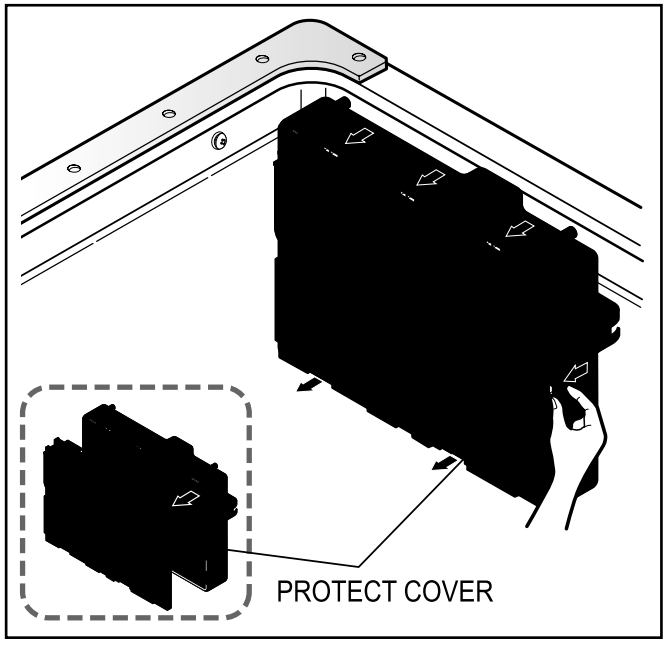

① Disconnect the POWER connector and SENSOR SWITCH ASSEMBLY.

② Remove the Protective cover.

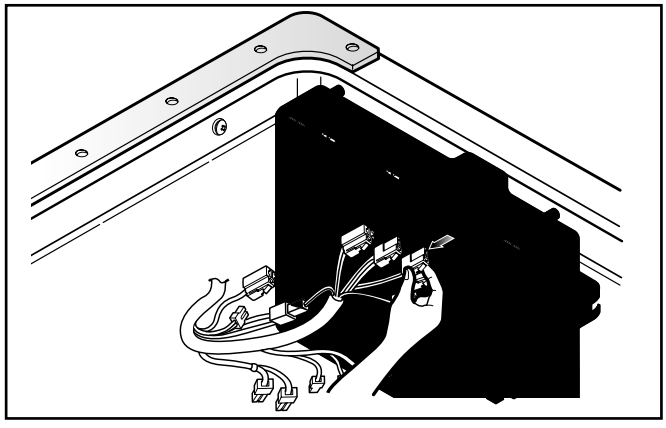

③ Disconnect the connectors.

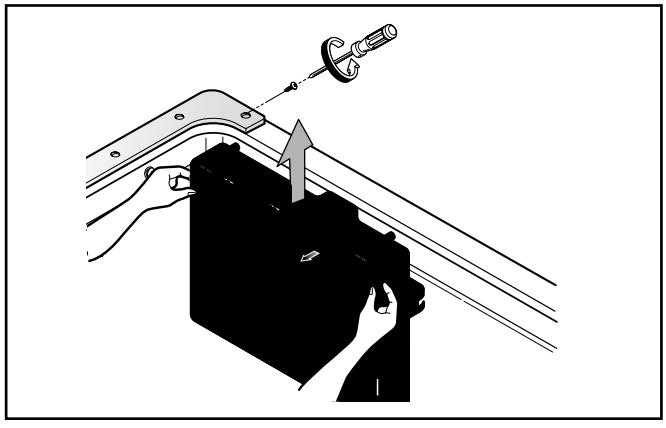

④ Unscrew 1 screw on the back.

⑤ Remove the Main PWB.

DISPENSER ASSEMBLY

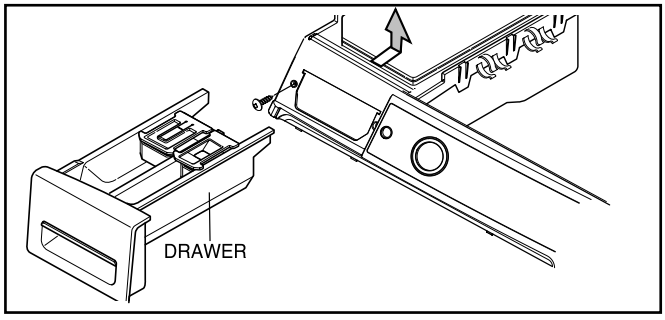

① Disassemble the top plate assembly.

② Pull out the drawer.

③ Push out the DISPENSER ASSEMBLY after unscrewing 2 screws.

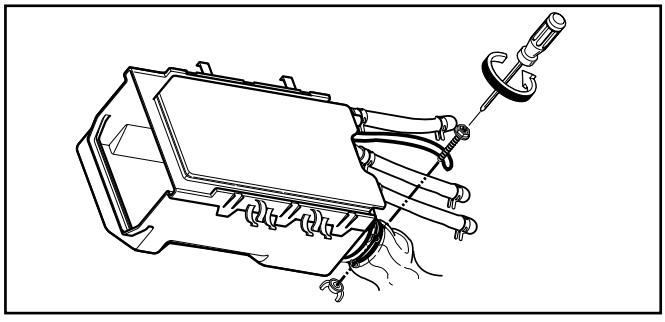

④ Unscrew the Clamp nut at the lower part of the dispenser.

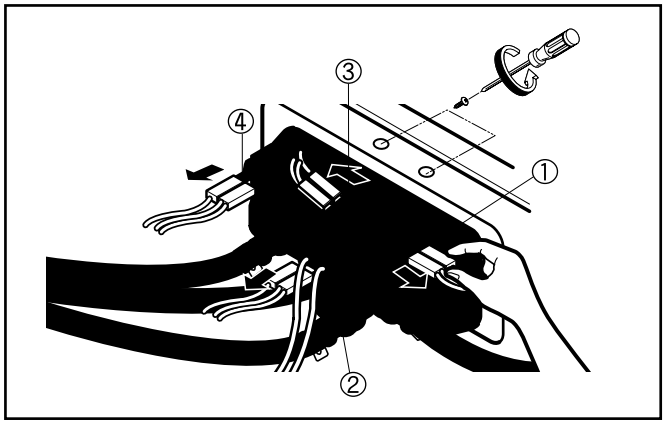

⑤ Disassemble the 4 connectors from the valves.

※ Wire Color
① Blue Housing (YL-BK)
② White Housing (BK-WH)
③ Blue Housing (BK-GY)
④ Red Housing (BK-Blue)

⑥ Unscrew 2 screws from the back of the cabinet.

NOISE FILTER

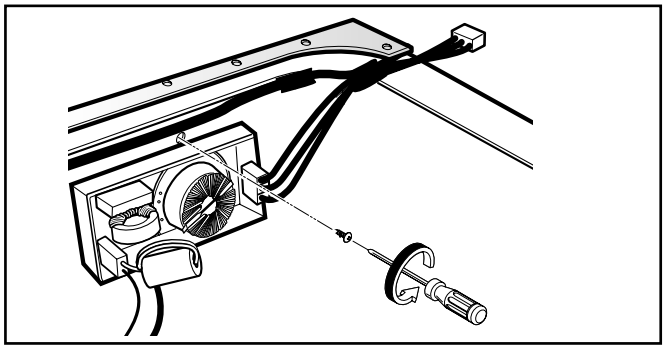

① Disassemble two (or three) connectors from the NOISE FILTER.

② Unscrew a screw from the TOP BRACKET.

CABINET COVER

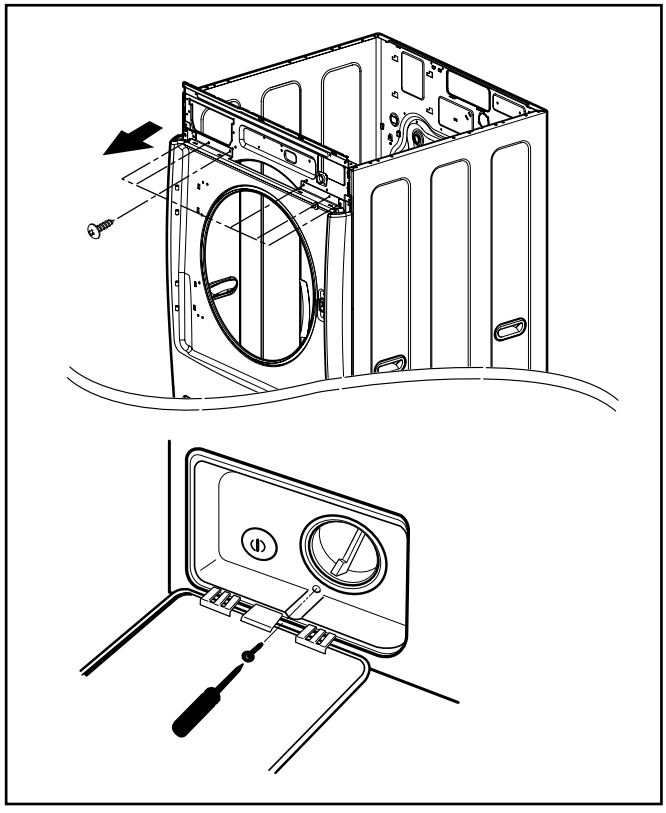

① Unscrew the 6 screws from upper of the canbinet cover.
② Unscrew the screw from filter cover.

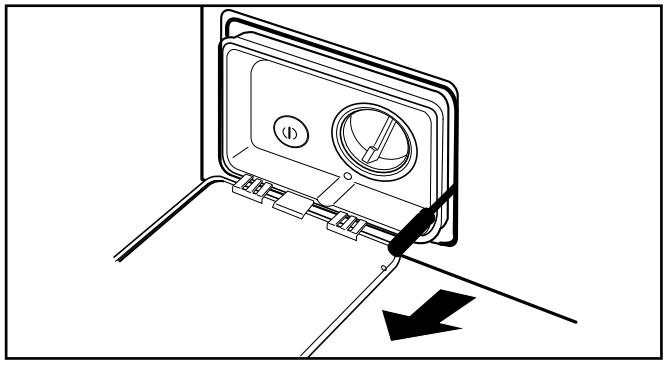

③ Put a flat (-) screwdriver or putty knife into the hinge slots at the bottom of the cover and pry it out.

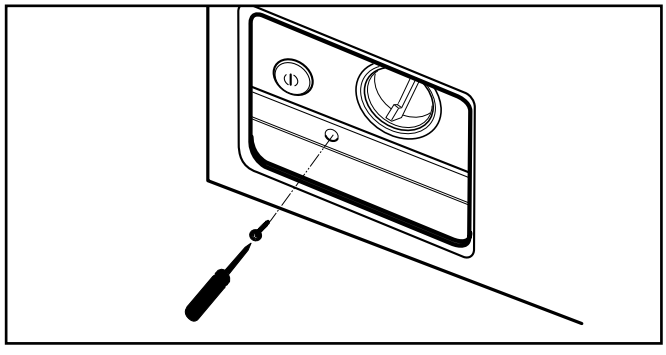

④ Unscrew the screw from the lower side of the cabinet cover.

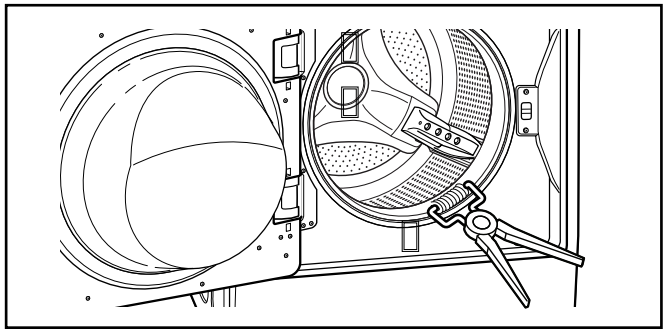

⑤ Open the door.

⑥ Disassemble the clamp assembly.

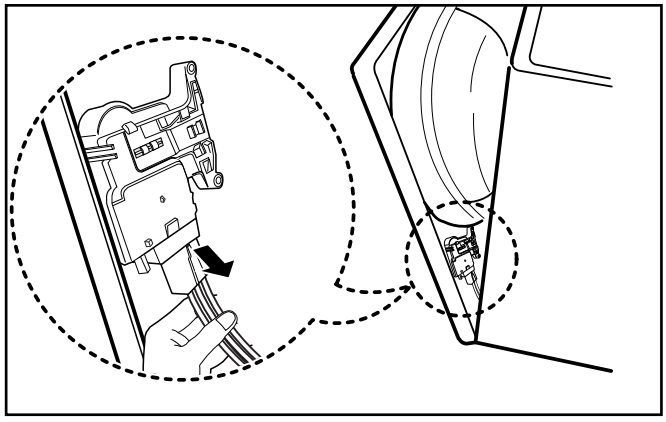

⑦ Tilt the cabinet cover.

⑧ Disconnect the door switch connector.

※ **NOTE:** When assembling the CABINET COVER, connect the door switch connector.

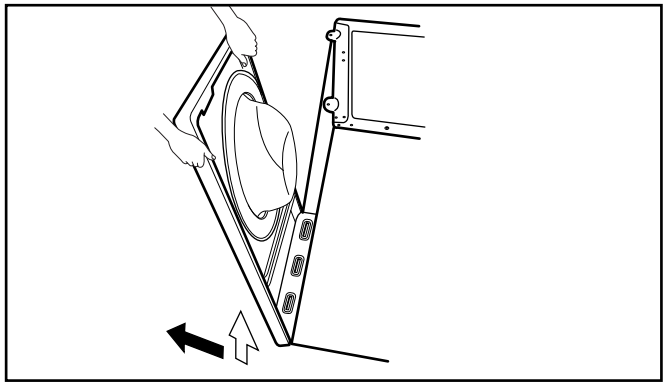

⑨ Lift and separate the cabinet cover.

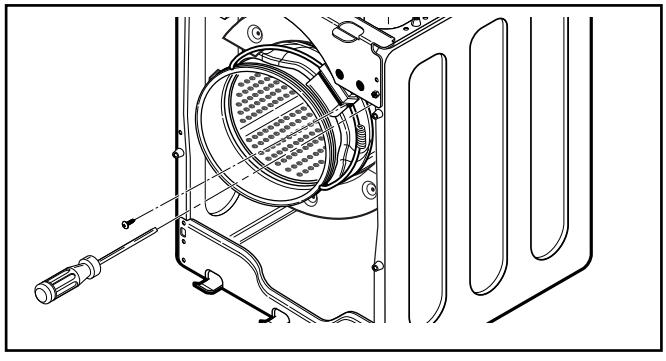

⑩ Disassemble the clamp assembly.

⑪ Disassemble the gasket.

DOOR

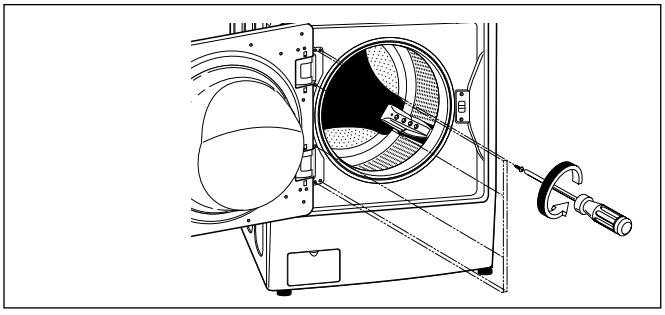

Open the door.

Unscrew the 6 screws from the HINGE COVER.

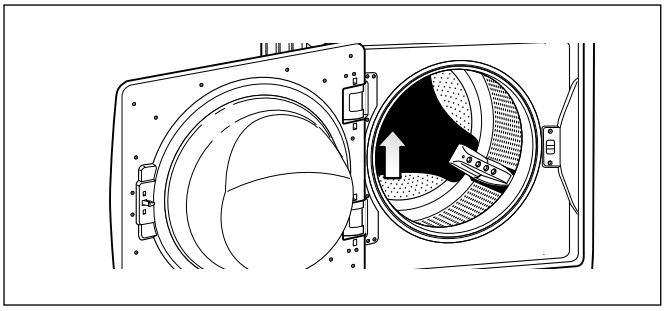

Put a flat (-) screwdriver into the openng of the hinge, and pull out the hinge cover.

DOOR LOCK SWITCH ASSEMBLY

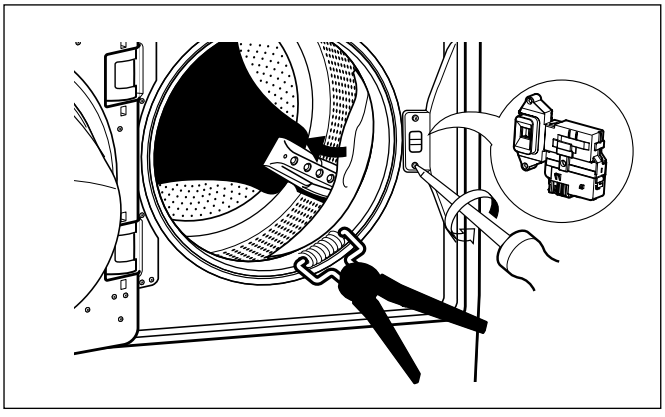

Open the door and disassemble the CLAMP ASSEMBLY.

Unscrew the 2 screws.

[redacted]

PUMP

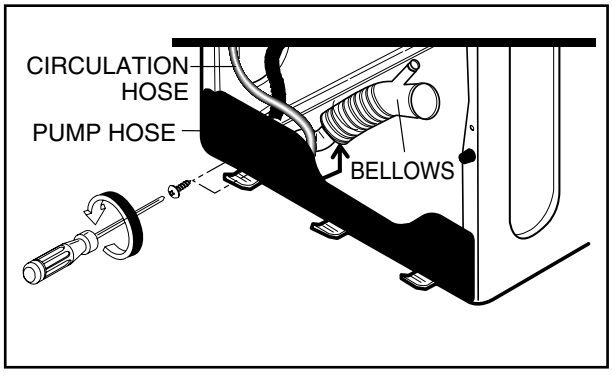

① Disassemble the cabinet cover.

② Separate the pump hose, the bellows and the circulation hose assembly from the pump assembly.

③ Disassemble the pump assembly in arrow direction.

HEATER

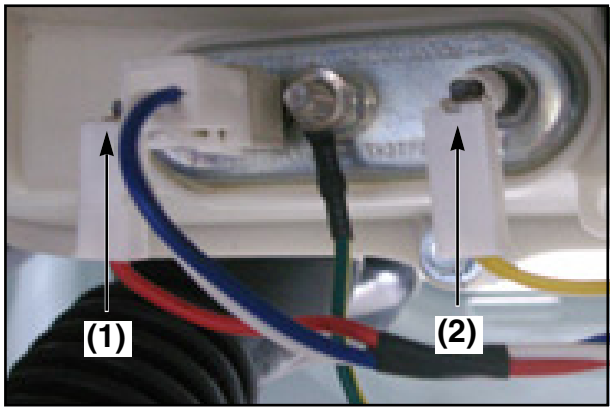

① Disassemble the cabinet cover.

② Separate 2 connectors from the heater.

③ Loosen the nut and pull out the heater.

※ CAUTION

- When assembling the heater, insert the heater into the heater clip on the bottom of the tub.
- Tighten the fastening nut so the heater is secure.

THERMISTOR

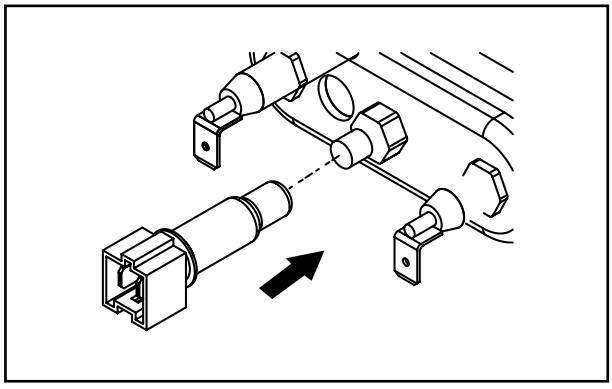

① Disassemble the cabinet cover.

② Unplug the white connector from the thermistor.

③ Pull it out by holding the bracket of the thermistor.

WHEN FOREIGN OBJECT IS STUCK BETWEEN DRUM AND TUB

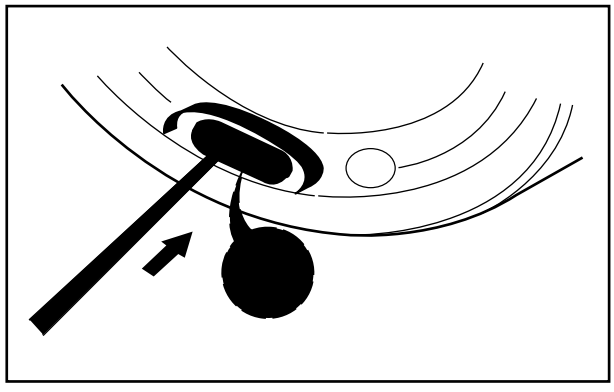

① Disassemble the cabinet cover.

② Separate the heater from the tub.

③ Remove any foreign objects (wire, coin, etc.) by inserting a long bar in the opening.

MOTOR/DAMPER

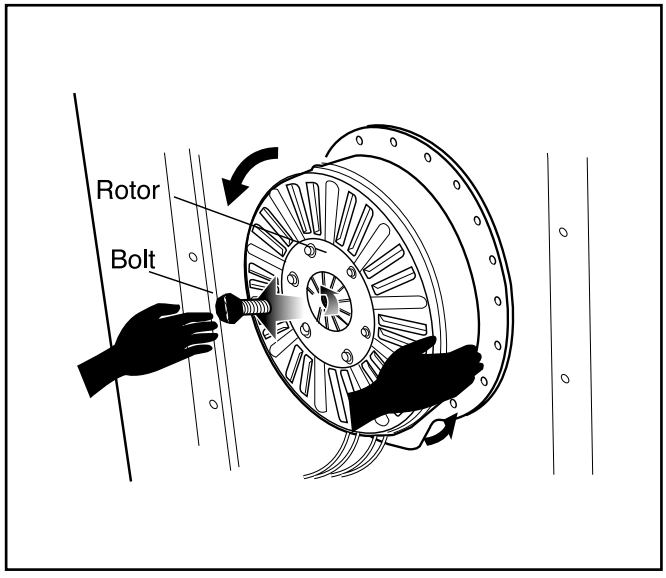

① Disassemble the back cover.
② Remove the bolt.
③ Pull out the Rotor.

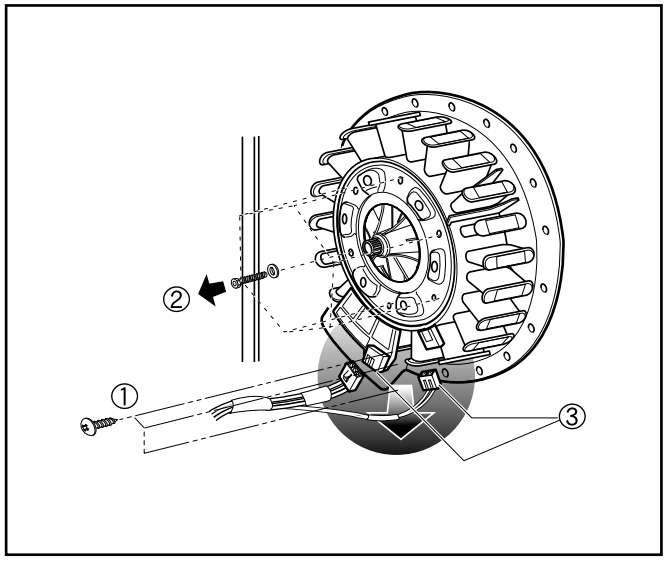

① Unscrew the 2 screws from the tub bracket.
② Remove the 6 bolts on the stator.
③ Unplug the 2 connectors from the stator.

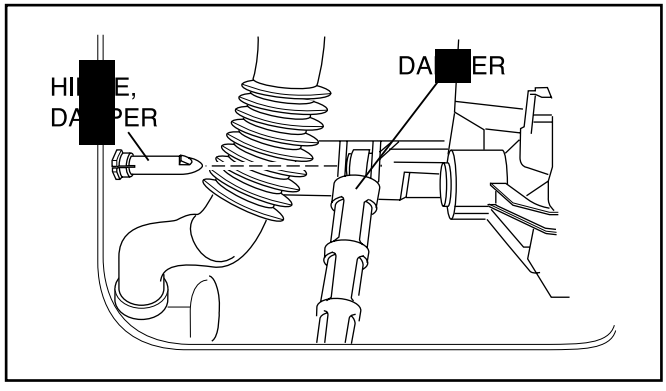

① Disassemble the damper hinges from the tub and base.

> ※ **NOTE**
> If you pull the dampers apart, the must be replaced. If you do not separate them, they can be re-used.

11. EXPLODED VIEW

11-1. CABINET & CONTROL PANEL ASSEMBLY

"The following parts are not illustrated"		
	Description	Loc No.
Printed materials	•Owner's Manual	G001
	•Energy Label	G002
	•Tech Sheet	G003
	•Service Manual	G004
	•Quick Start Guides	G006
	•Installation Sheet	G007

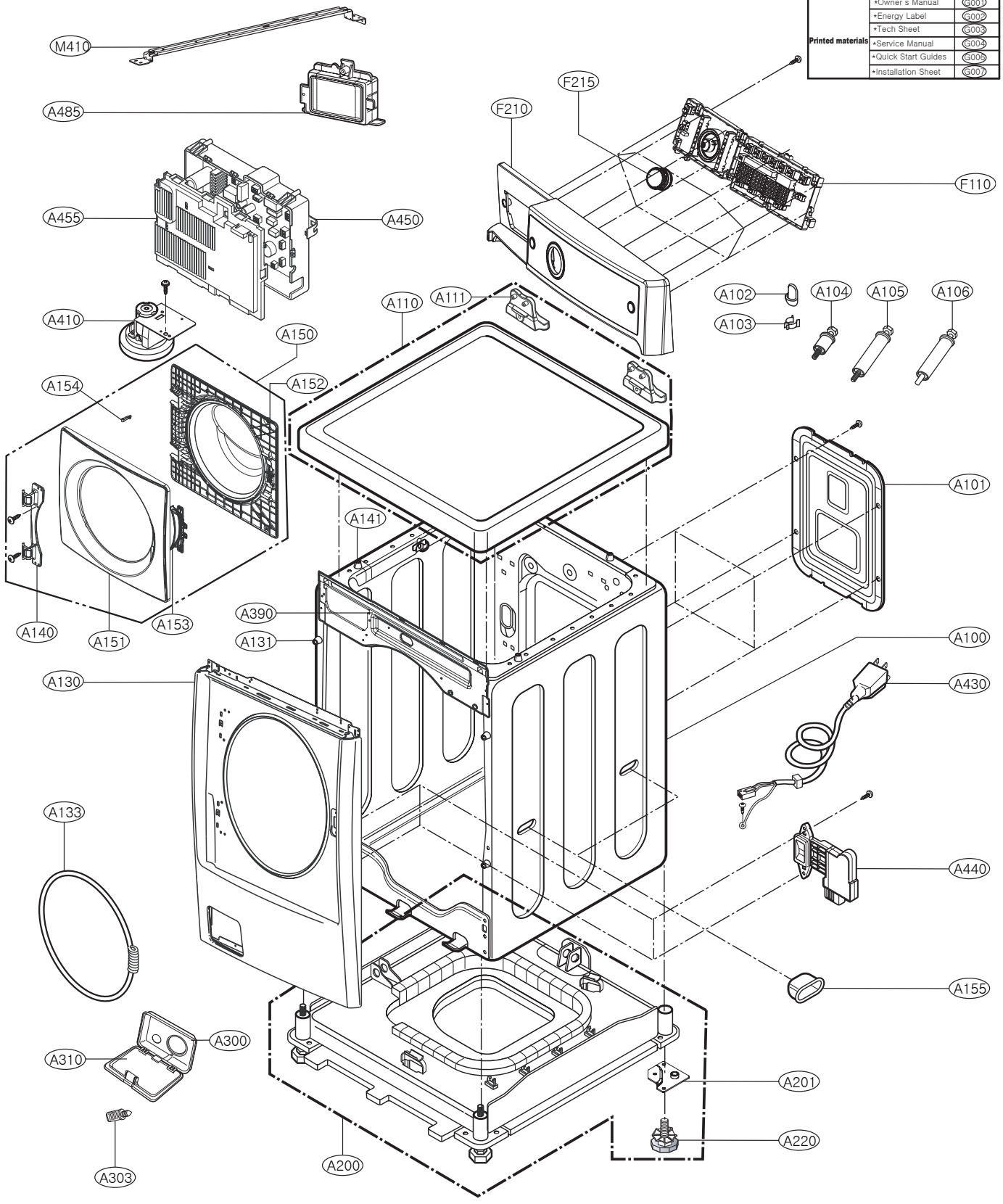

11-2. DRUM & TUB ASSEMBLY

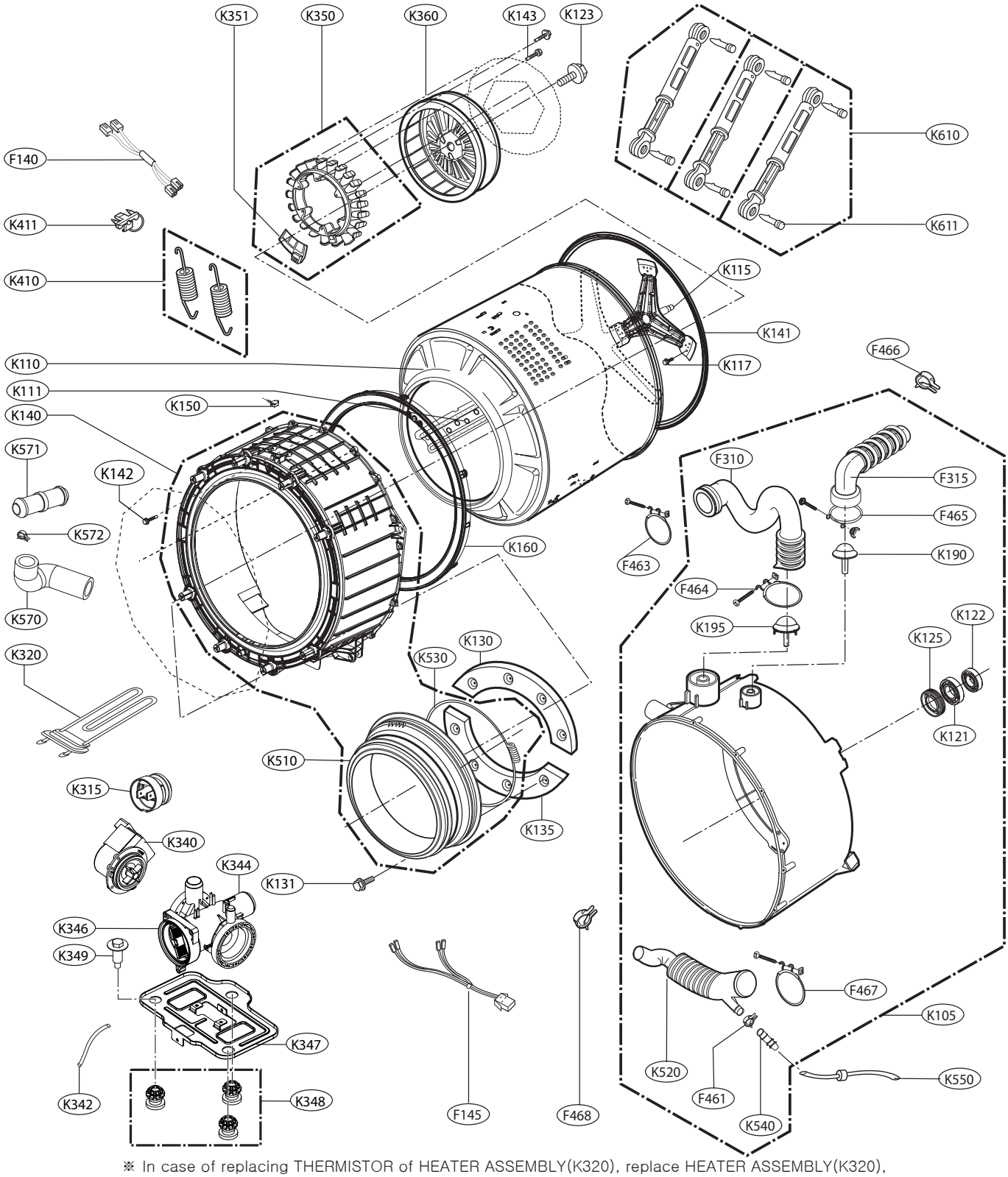

※ In case of replacing THERMISTOR of HEATER ASSEMBLY(K320), replace HEATER ASSEMBLY(K320), HEATER ASSEMBLY(K320) includes THERMISTOR.

※ In case of replacing BEARING,BALL(K121,K122) and GASKET(K125), replace TUB ASSEMBLY,OUTER(K105), TUB ASSEMBLY,OUTER(K105) includes BEARING,BALL(K121,K122) and GASKET(K125).

※ Part Assembly(K142) includes 10 screws.
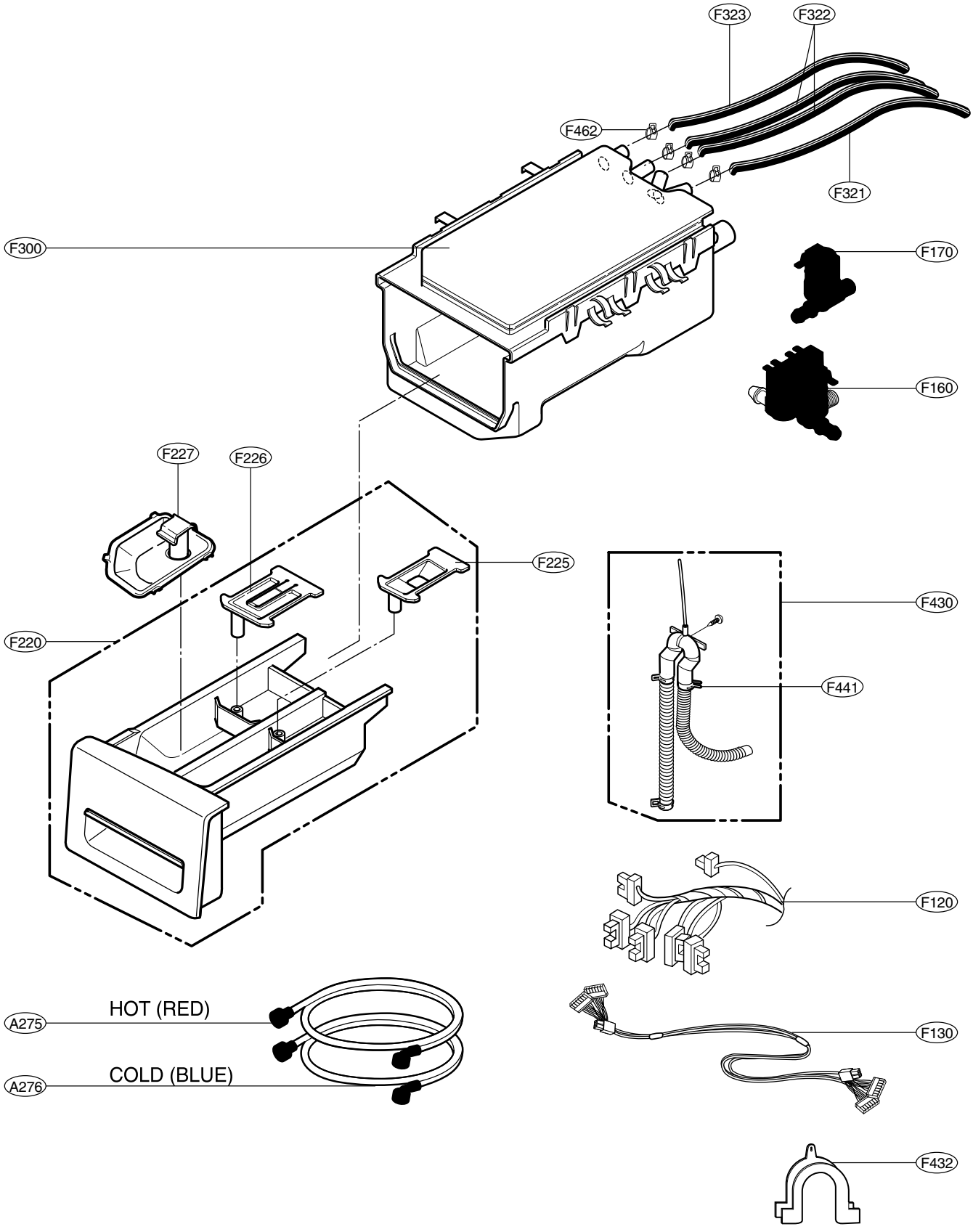
11-3. DISPENSER ASSEMBLY