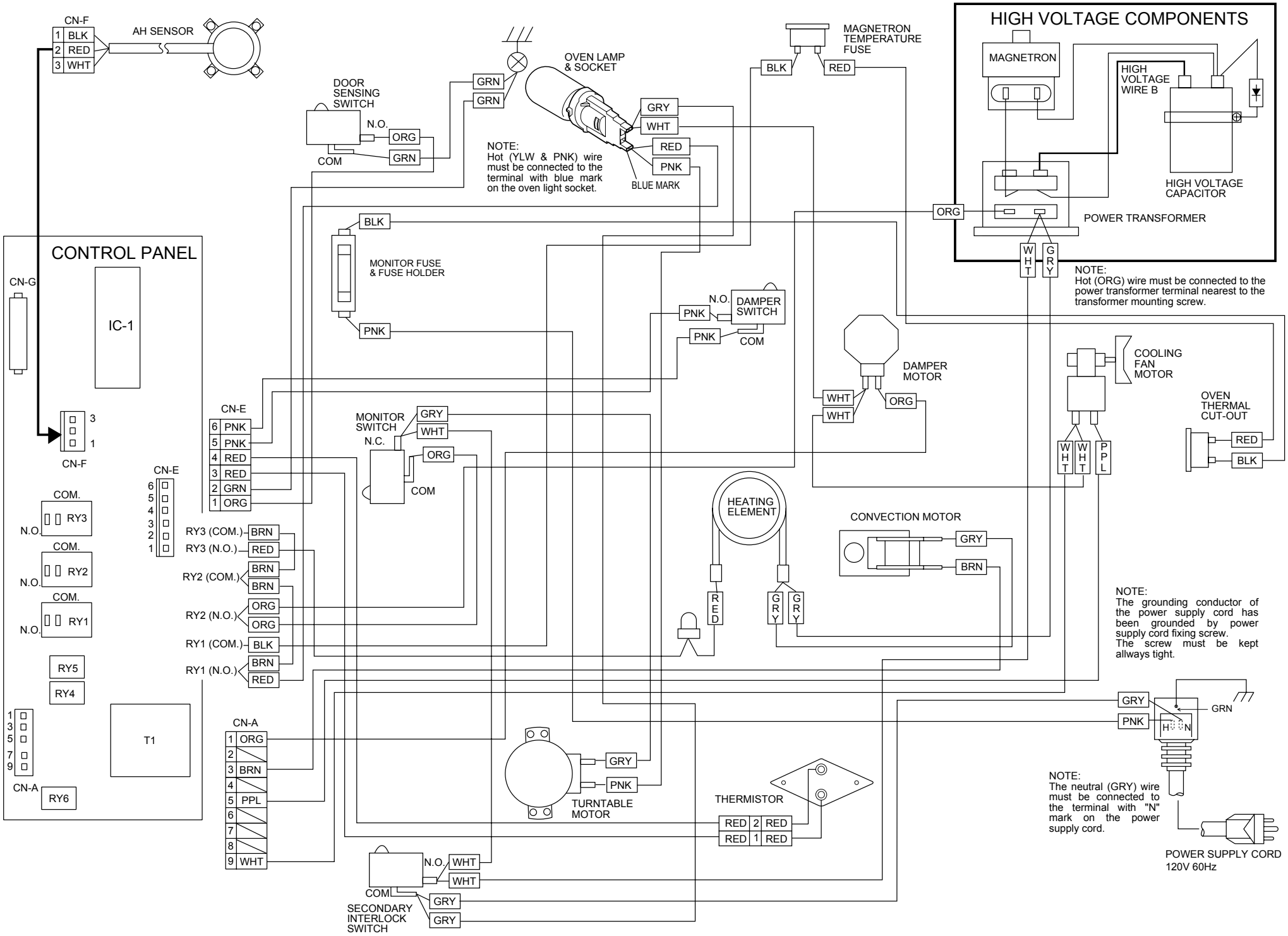
CN-F
1 BLK
2 RED
3 WHT
AH SENSOR
DOOR SENSING SWITCH
N.O.
COM
ORG
GRN
GRN
GRN
OVEN LAMP & SOCKET
GRY
WHT
RED
PNK
BLUE MARK
NOTE:
Hot (YLW & PNK) wire must be connected to the terminal with blue mark on the oven light socket.
MAGNETRON TEMPERATURE FUSE
BLK
RED
HIGH VOLTAGE COMPONENTS
MAGNETRON
HIGH VOLTAGE WIRE B
HIGH VOLTAGE CAPACITOR
ORG
POWER TRANSFORMER
WHT
GRY
NOTE:
Hot (ORG) wire must be connected to the power transformer terminal nearest to the transformer mounting screw.
CONTROL PANEL
CN-G
IC-1
CN-F
3
1
CN-E
6 PNK
5 PNK
4 RED
3 RED
2 GRN
1 ORG
BLK
MONITOR FUSE & FUSE HOLDER
PNK
N.O.
DAMPER SWITCH
PNK
PNK
COM
DAMPER MOTOR
WHT
WHT
ORG
COOLING FAN MOTOR
OVEN THERMAL CUT-OUT
RED
BLK
WHT
WHT
PPL
MONITOR SWITCH
N.C.
GRY
WHT
ORG
COM
CN-E
6
5
4
3
2
1
COM.
RY3
N.O.
COM.
RY2
N.O.
COM.
RY1
N.O.
RY5
RY4
RY3 (COM.) BRN
RY3 (N.O.) RED
RY2 (COM.) BRN BRN
RY2 (N.O.) ORG ORG
RY1 (COM.) BLK
RY1 (N.O.) BRN RED
HEATING ELEMENT
RED
GRY
GRY
CONVECTION MOTOR
GRY
BRN
NOTE:
The grounding conductor of the power supply cord has been grounded by power supply cord fixing screw.
The screw must be kept allways tight.
1
3
5
7
9
CN-A
RY6
T1
CN-A
1 ORG
2
3 BRN
4
5 PPL
6
7
8
9 WHT
GRY
PNK
TURNTABLE MOTOR
THERMISTOR
RED 2 RED
RED 1 RED
GRY
PNK
GRN
H
N
NOTE:
The neutral (GRY) wire must be connected to the terminal with "N" mark on the power supply cord.
POWER SUPPLY CORD
120V 60Hz
N.O.
WHT
WHT
COM
GRY
GRY
SECONDARY INTERLOCK SWITCH